EVERGLADES NATIONAL PARK ECO-TENT
UNIVERSITY OF MIAMI DESIGN BUILD
SCHOOL OF ARCHITECTURE

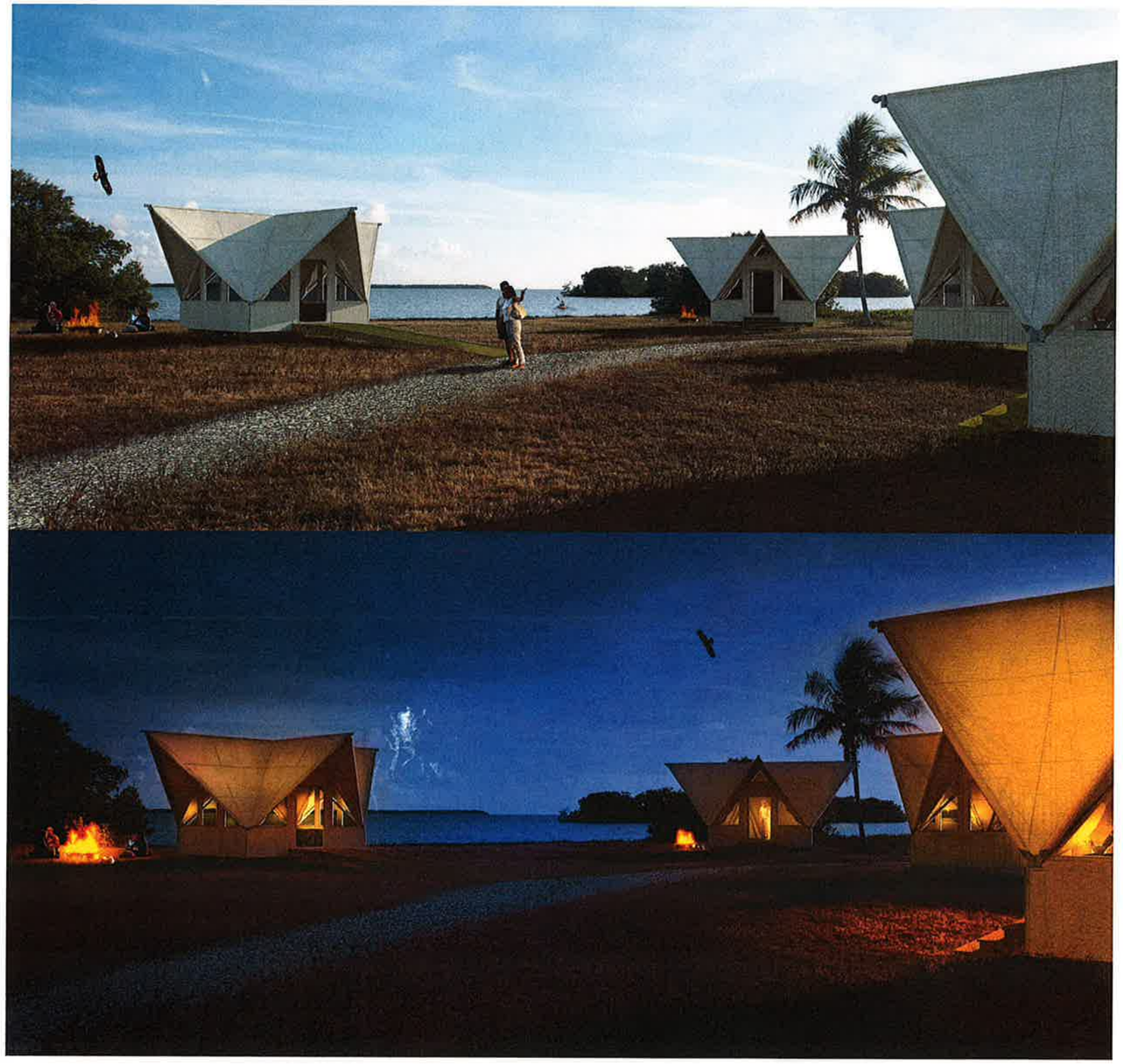

CONSTRUCTION DOCUMENTS
SPRING 2012

SHEET INDEX

00 COVER SHEET
L1 SITE PLAN
S1 FOUNDATION PLAN
S2 FRAMING AND KNEE WALL PLAN
S3 FRAME DETAILS
S4 KNEE WALL MODULE DETAILS
A1 FLOOR PLAN
A2 SECTION LOOKING SOUTH
A3 SECTION LOOKING NORTH
A4 SECTION LOOKING EAST
A5 SECTION LOOKING WEST
A6 SOUTH ELEVATION
A7 NORTH ELEVATION
A8 EAST ELEVATION
A9 WEST ELEVATION
A10 WALL TENT PANELS
A11 WALL TENT PANELS
A12 WALL TENT PANELS
A13 CANOPY CONNECTIONS
A14 CANOPY CONNECTIONS
A15 CONNECTORS: WALL
A16 CONNECTORS: CENTER
A17 CONNECTORS: CORNER
A18 CONNECTORS: BASE
A19 CAMPAIGN BED
A20 CAMPAIGN TABLE
A21 CAMPAIGN STOOL

PARTICIPANTS

INSTRUCTORS
ROCCO CEO
JIM ADAMSON

STUDENTS
VIOLET BATTAT
GIANCARLO BELLEDONNE
MICHAEL GALEA
CARLO GUZMAN
GLENN LAASPERE
HAO LUAN
RUSLANA MAKARENKO
CATHERINE O'SULLIVAN
KELLY SAWYNA
MEAGAN SIPPEL
SAM VANA

CONSULTANTS
ADRIAN VILLARAOS
WOODWORK
DENIS HECTOR
FABRIC ASSEMBLY
GERALD DEMARCO
STRUCTURE

LOCATION MAP
SCALE: N.T.S.

1 / L1 SITE PLAN
SCALE : 1" = 60' - 0"

EVERGLADES NATIONAL PARK ECO-TENT
UNIVERSITY OF MIAMI DESIGN BUILD
SCHOOL OF ARCHITECTURE

N

SITE PLAN

DATE: MARCH 3, 2012
SCALE: 1" = 60' - 0"
DRAWN BY: SAM V.
CHECKED BY: MEAGAN S.
REVISIONS: 02_29_12

SHEET NUMBER

L1

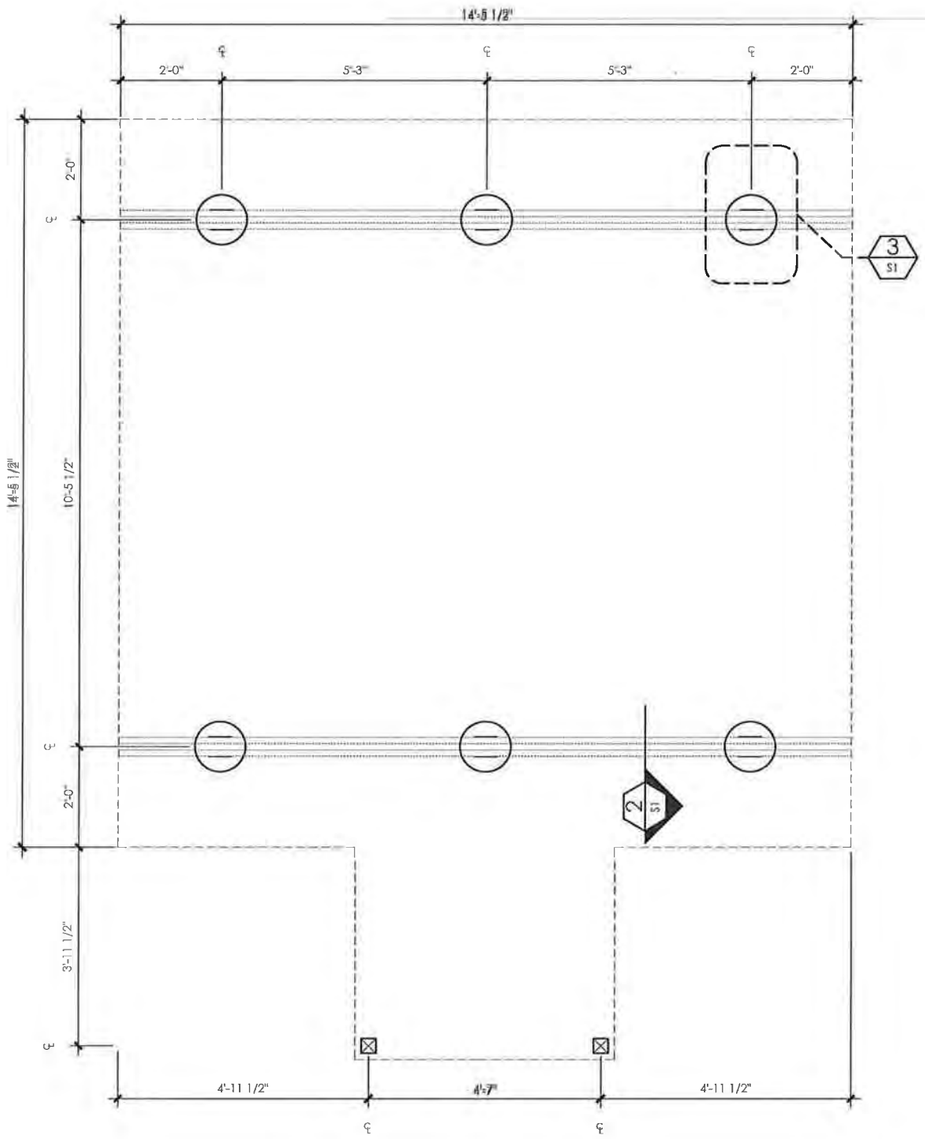

1 S1 FOUNDATION PLAN
SCALE : 3/4" = 1' - 0"

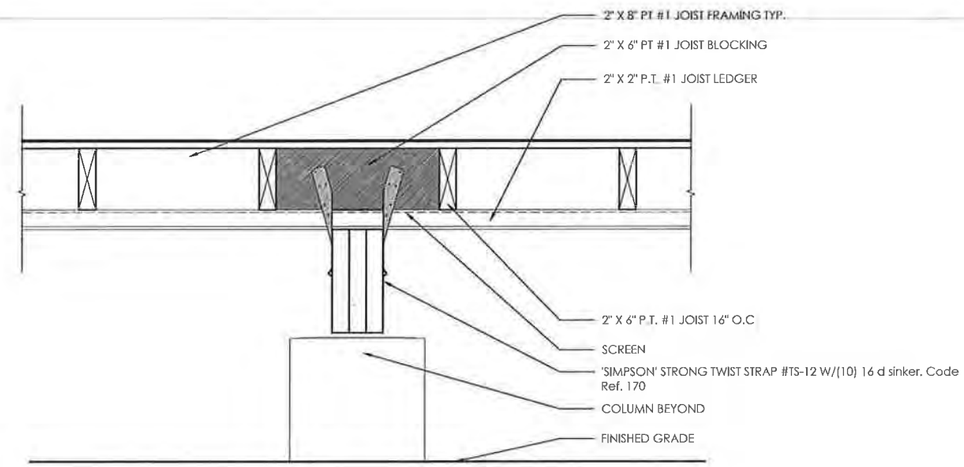

2 S1 GIRDER TO JOIST CONNECTION
SCALE : 2" = 1' - 0"

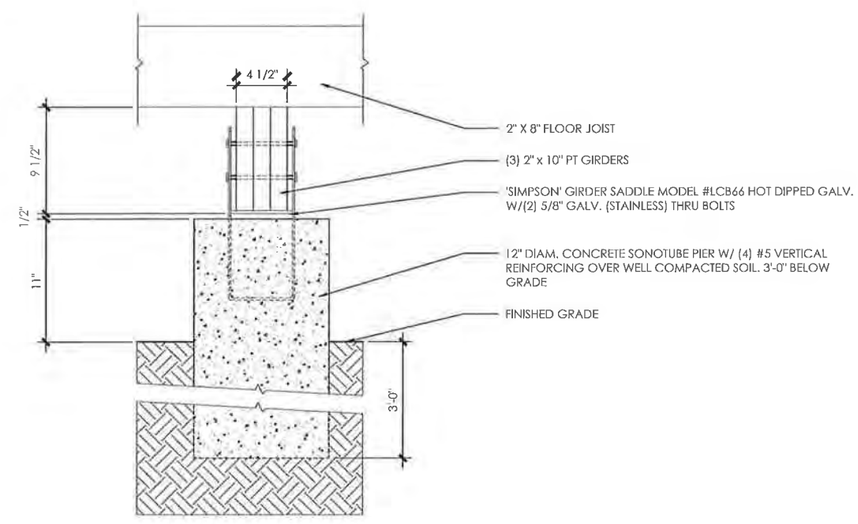

3 S1 PILE TO GIRDER CONNECTION
SCALE : 2" = 1' - 0"

EVERGLADES NATIONAL PARK ECO-TENT
UNIVERSITY OF MIAMI DESIGN BUILD
SCHOOL OF ARCHITECTURE

N

FOUNDATION PLAN

DATE: MARCH 3, 2012
SCALE: SEE SHEET
DRAWN BY: GIANCARLO B.
CHECKED BY: MEAGAN S.
REVISIONS: 02.29.12

SHEET NUMBER
S1

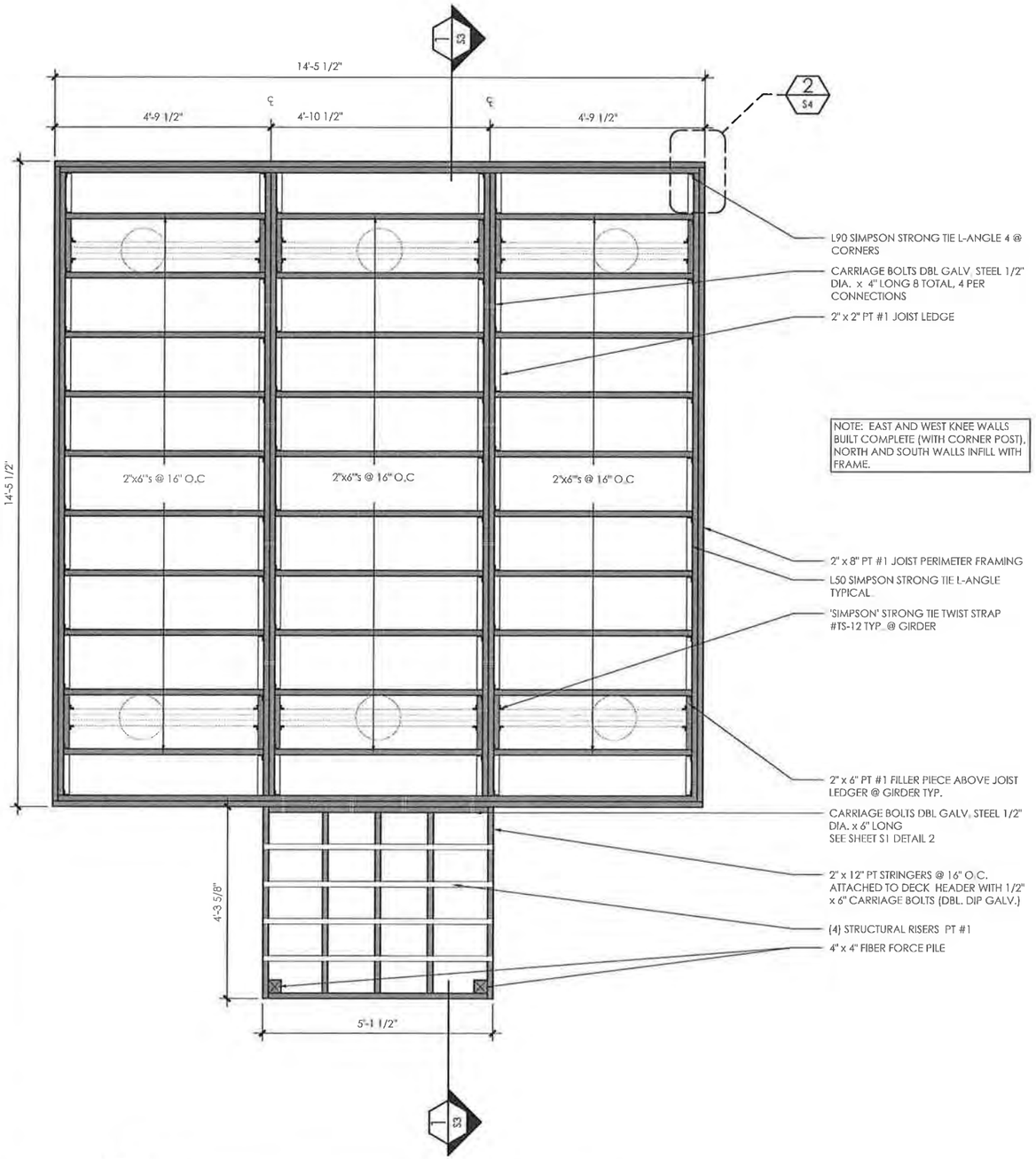

1 / S2 PLAN : STAIR AND DECK FRAMING
SCALE : 3/4" = 1' - 0"

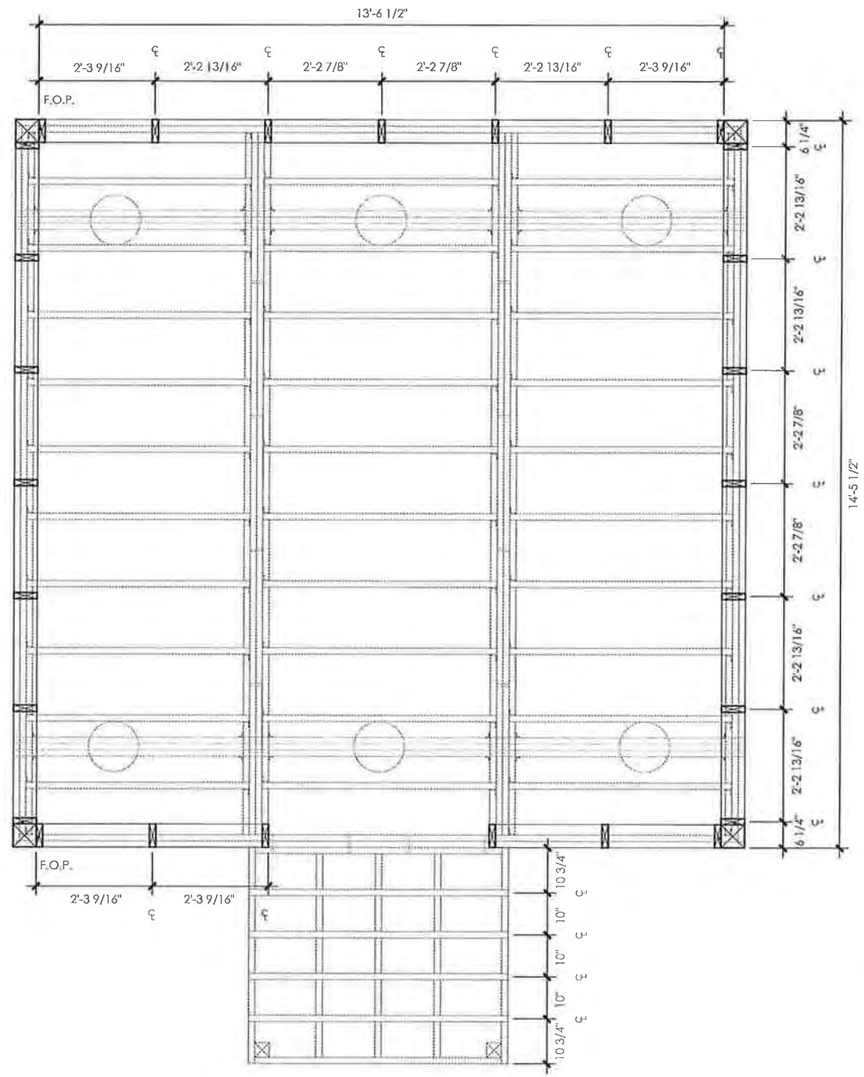

2 / S2 PLAN : KNEE WALL
SCALE : 3/4" = 1' - 0"

EVERGLADES NATIONAL PARK ECO-TENT
UNIVERSITY OF MIAMI DESIGN BUILD
SCHOOL OF ARCHITECTURE

N

FRAMING AND KNEE WALL PLAN

DATE: MARCH 3, 2012
SCALE: 3/4" = 1' - 0"
DRAWN BY: RUSLANA M.
CHECKED BY: MEAGAN S.
REVISIONS: 02_29_12

SHEET NUMBER
S2

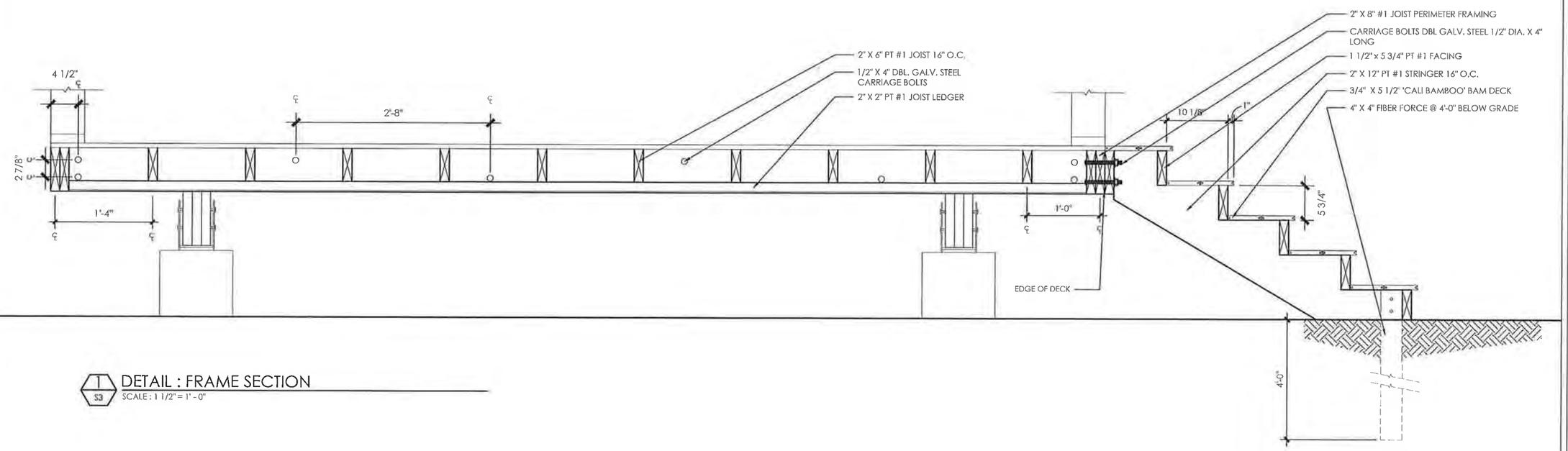

1 / S3 DETAIL : FRAME SECTION
SCALE : 1 1/2" = 1' - 0"

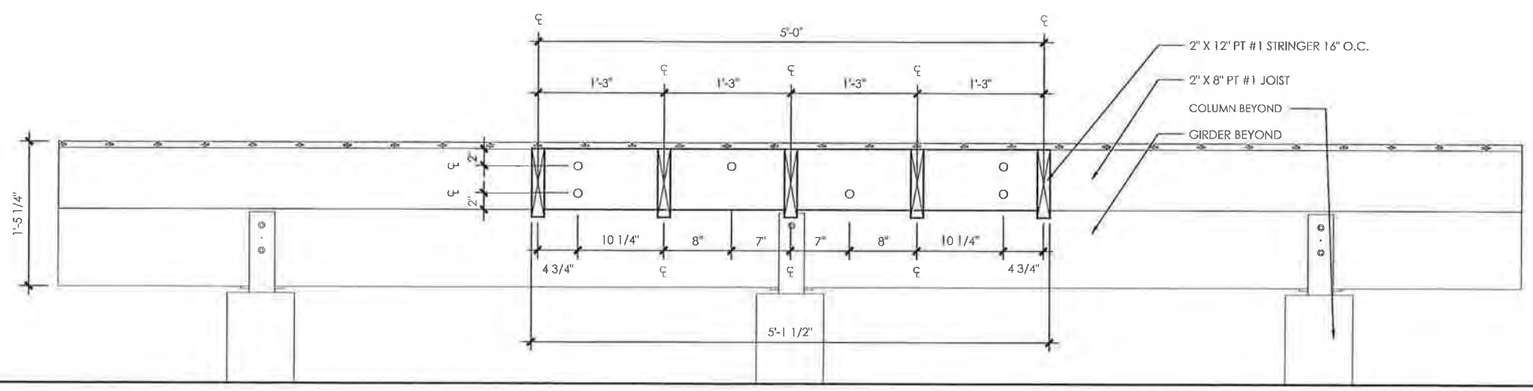

2 / S3 DETAIL : STAIR SECTION
SCALE : 1 1/2" = 1' - 0"

EVERGLADES NATIONAL PARK ECO-TENT
UNIVERSITY OF MIAMI DESIGN BUILD
SCHOOL OF ARCHITECTURE

FRAMING DETAILS

DATE: MARCH 3, 2012
SCALE: 1 1/2" = 1' - 0"
DRAWN BY: GIANCARLO B.
CHECKED BY: MEAGAN S.
REVISIONS: 02_29_12

SHEET NUMBER
S3

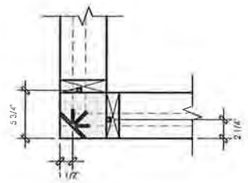

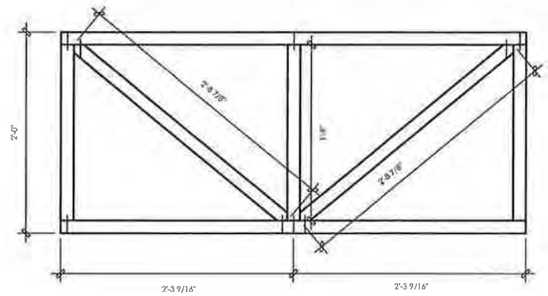

1 / S4 KNEE WALL MODULE : PLAN A
SCALE : 1 1/2" = 1' - 0"

4 / S4 KNEE WALL MODULE : ELEVATION
SCALE : 1 1/2" = 1' - 0"

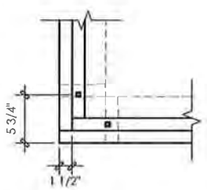

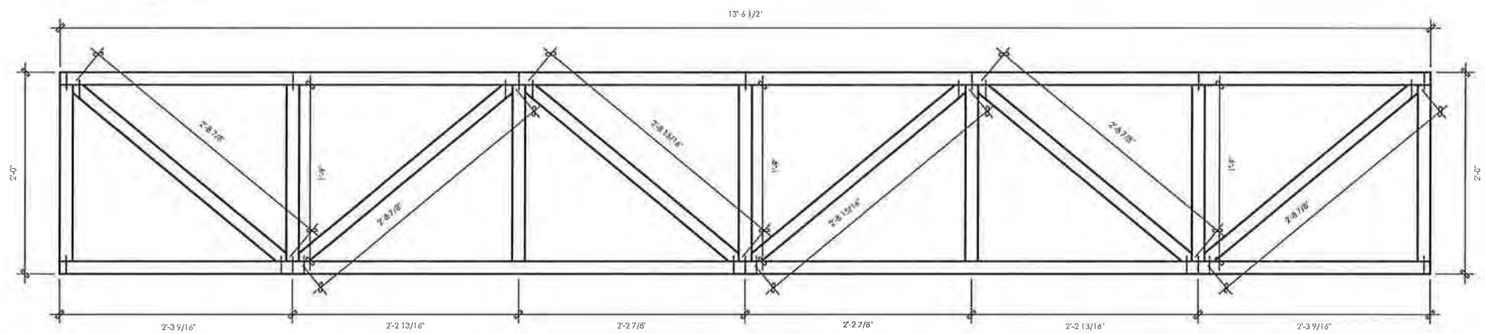

2 / S4 KNEE WALL MODULE : PLAN B
SCALE : 1 1/2" = 1' - 0"

5 / S4 KNEE WALL MODULE : ELEVATION
SCALE : 1 1/2" = 1' - 0"

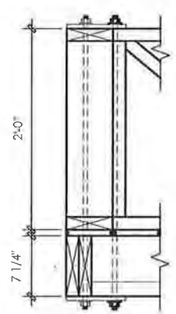

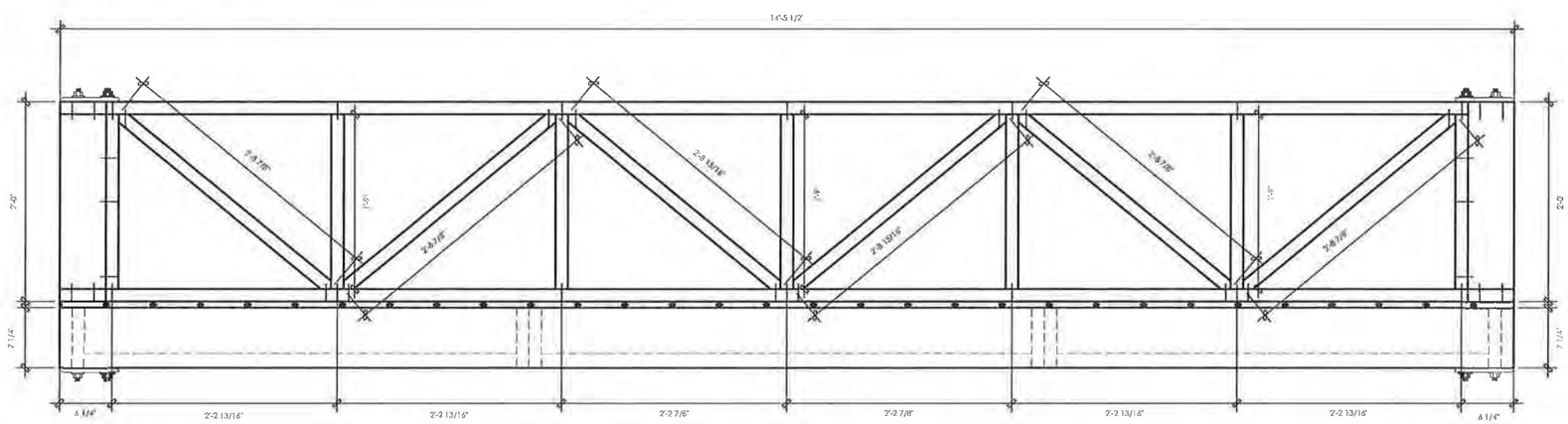

3 / S4 KNEE WALL MODULE : SECTION
SCALE : 1 1/2" = 1' - 0"

6 / S4 KNEE WALL MODULE : ELEVATION
SCALE : 1 1/2" = 1' - 0"

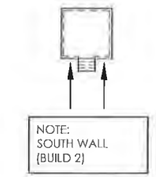

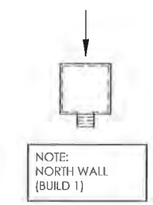

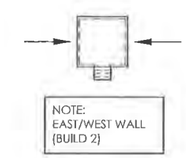

EVERGLADES NATIONAL PARK ECO-TENT
UNIVERSITY OF MIAMI DESIGN BUILD
SCHOOL OF ARCHITECTURE

KNEE WALL MODULE DETAILS

DATE: MARCH 3, 2012
SCALE: 1 1/2" = 1' - 0"
DRAWN BY: GLENN L.
CHECKED BY: MEAGAN S.
REVISIONS: 02_29_12

SHEET NUMBER
S4

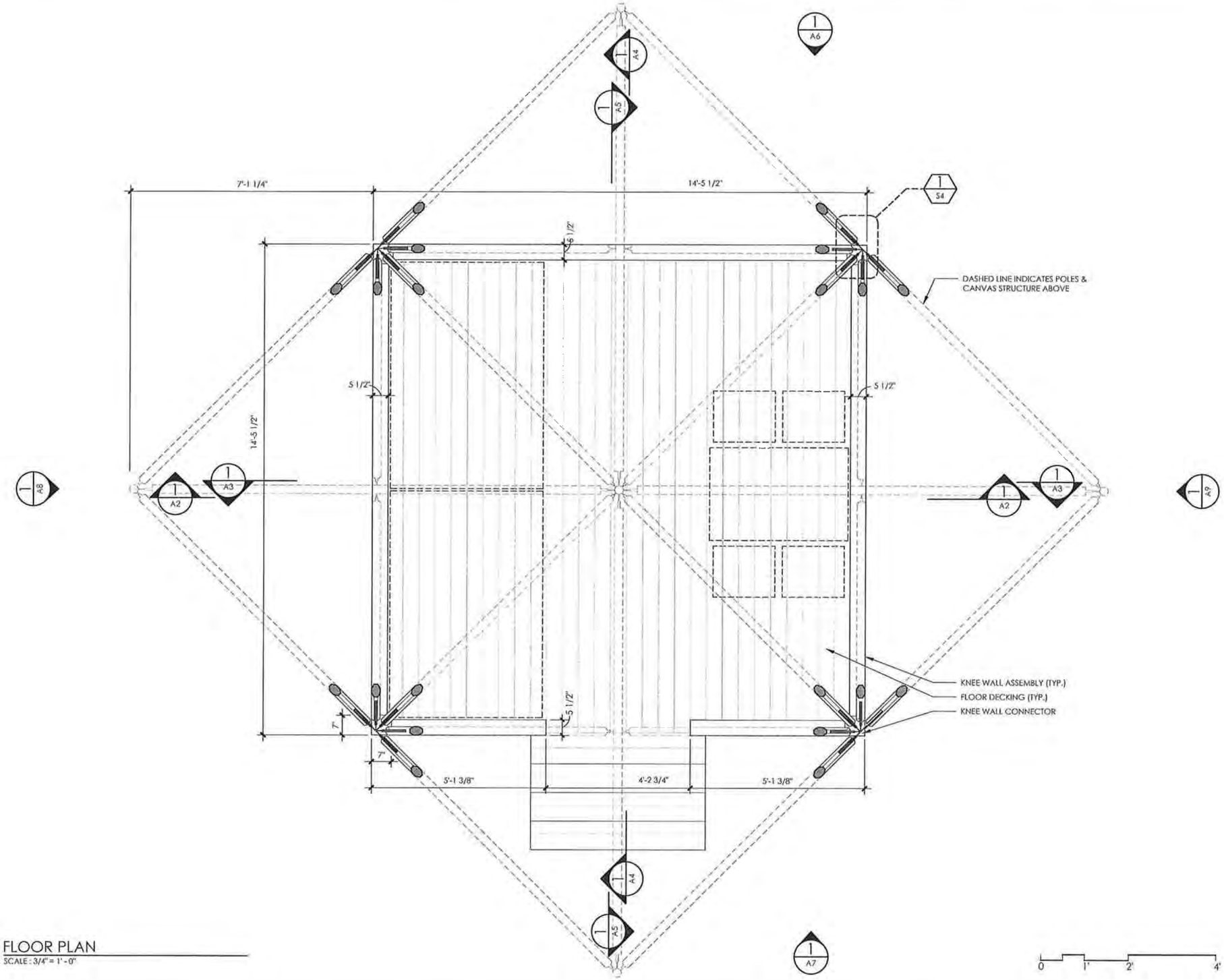

1 A1 FLOOR PLAN
SCALE : 3/4" = 1' - 0"

EVERGLADES NATIONAL PARK ECO-TENT
UNIVERSITY OF MIAMI DESIGN BUILD
SCHOOL OF ARCHITECTURE

N

FLOOR PLAN

DATE: MARCH 3, 2012
SCALE: 3/4" = 1' - 0"
DRAWN BY: CARLO G.
CHECKED BY: MEAGAN S.
REVISIONS: 02_29_12

SHEET NUMBER
A1

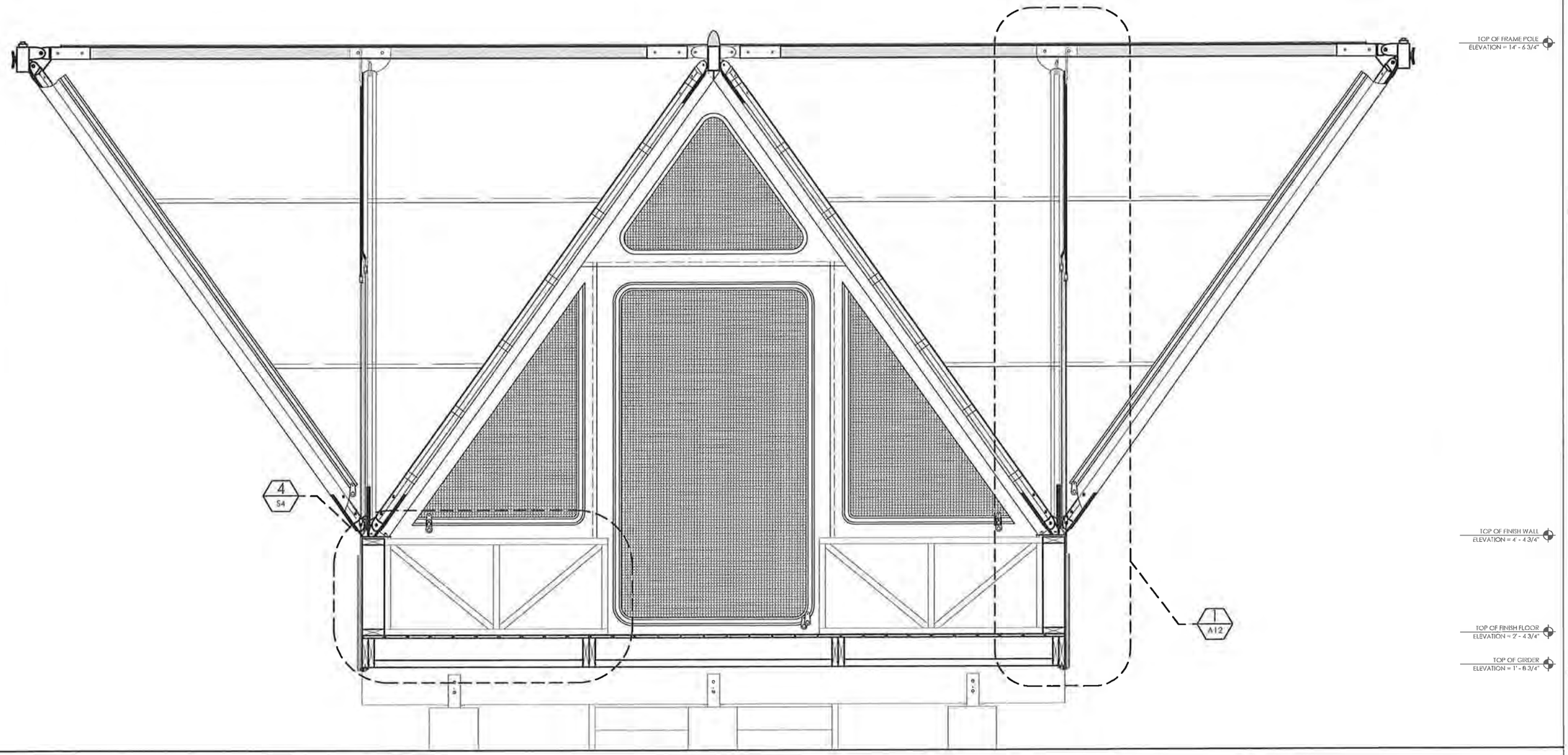

1 / A2 SECTION LOOKING SOUTH
SCALE : 1" = 1' - 0"

0 1' 2' 4'

EVERGLADES NATIONAL PARK ECO-TENT
UNIVERSITY OF MIAMI DESIGN BUILD
SCHOOL OF ARCHITECTURE

SECTION
LOOKING SOUTH

DATE: MARCH 3, 2012
SCALE: 1" = 1' - 0"
DRAWN BY: SAM V.
CHECKED BY: MEAGAN S.
REVISIONS: 02_29_12

SHEET NUMBER
A2

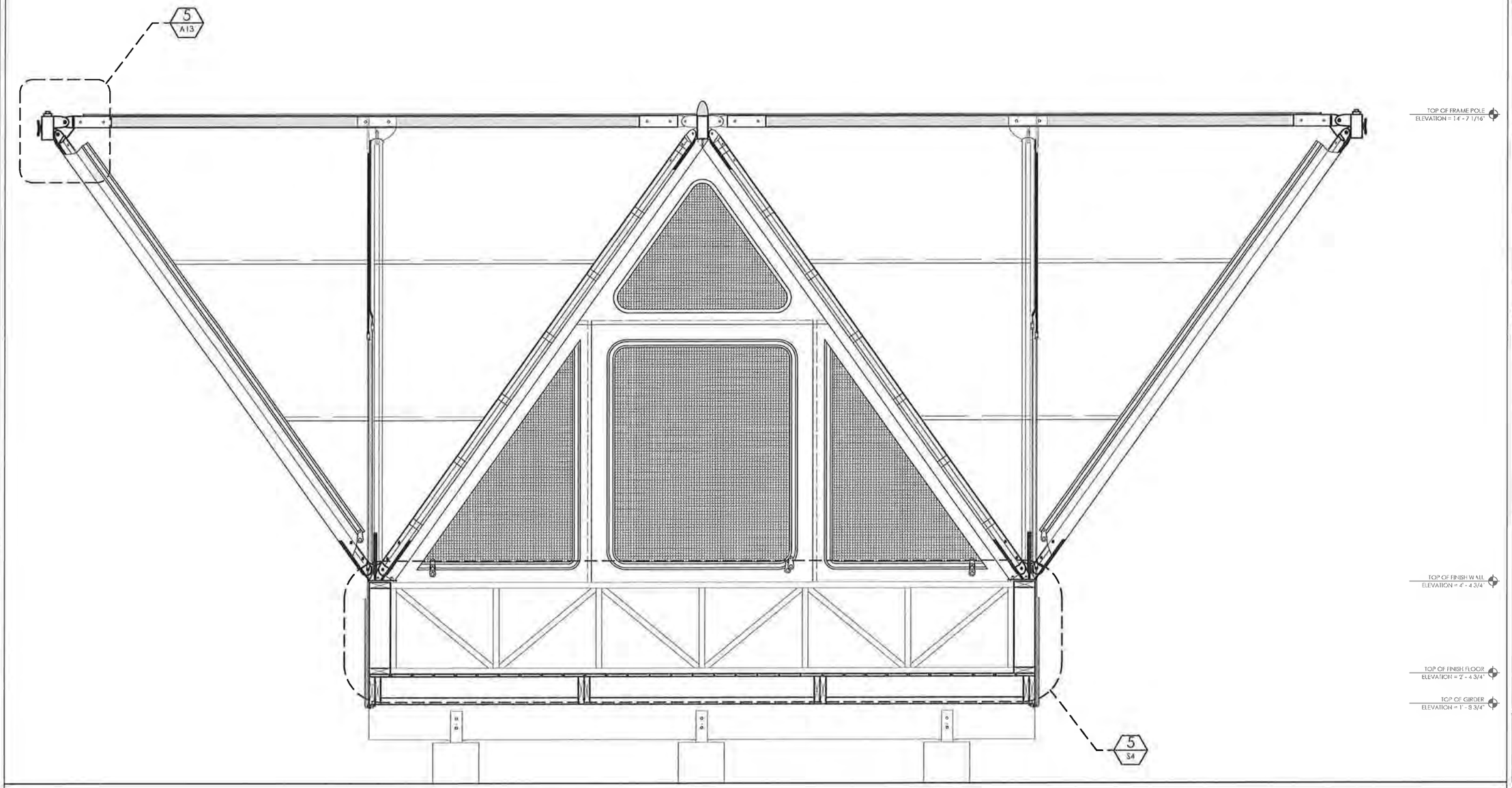

1 A3 SECTION LOOKING NORTH
SCALE: 1/4" = 1'-0"

0 1' 2' 4'

EVERGLADES NATIONAL PARK ECO-TENT
UNIVERSITY OF MIAMI DESIGN BUILD
SCHOOL OF ARCHITECTURE

SECTION
LOOKING NORTH

DATE: MARCH 3, 2012
SCALE: 1" = 1'-0"
DRAWN BY: SAM V.
CHECKED BY: MEAGAN S.
REVISIONS: 02.28.12

SHEET NUMBER
A3

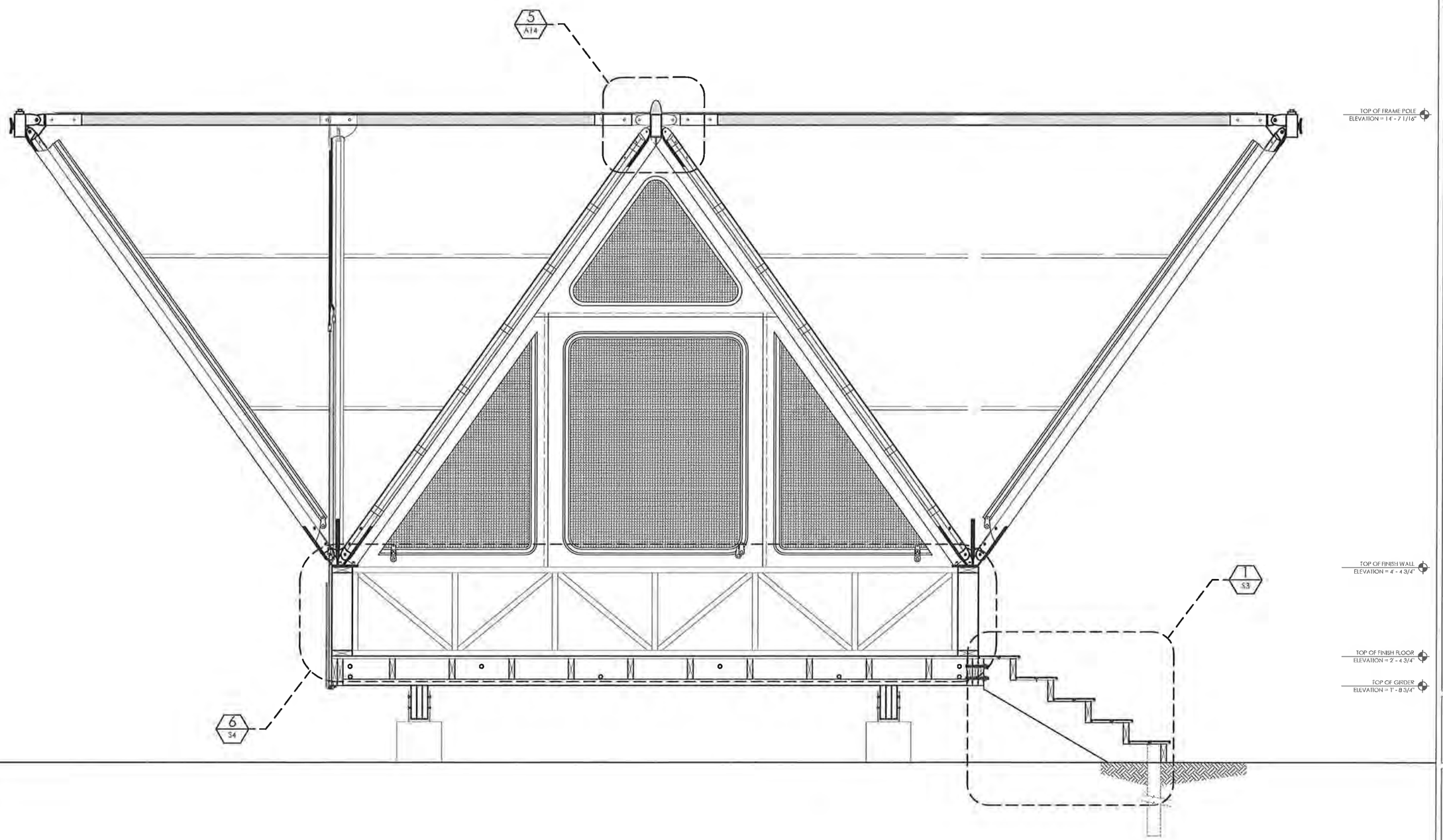

1 A4 SECTION LOOKING EAST
SCALE : 1" = 1' - 0"

0 1' 2' 4'

EVERGLADES NATIONAL PARK ECO-TENT
UNIVERSITY OF MIAMI DESIGN BUILD
SCHOOL OF ARCHITECTURE

SECTION
LOOKING EAST

DATE: MARCH 3, 2012
SCALE: 1" = 1' - 0'
DRAWN BY: SAM V
CHECKED BY: MEAGAN S
REVISIONS: 02_29_12

SHEET NUMBER
A4

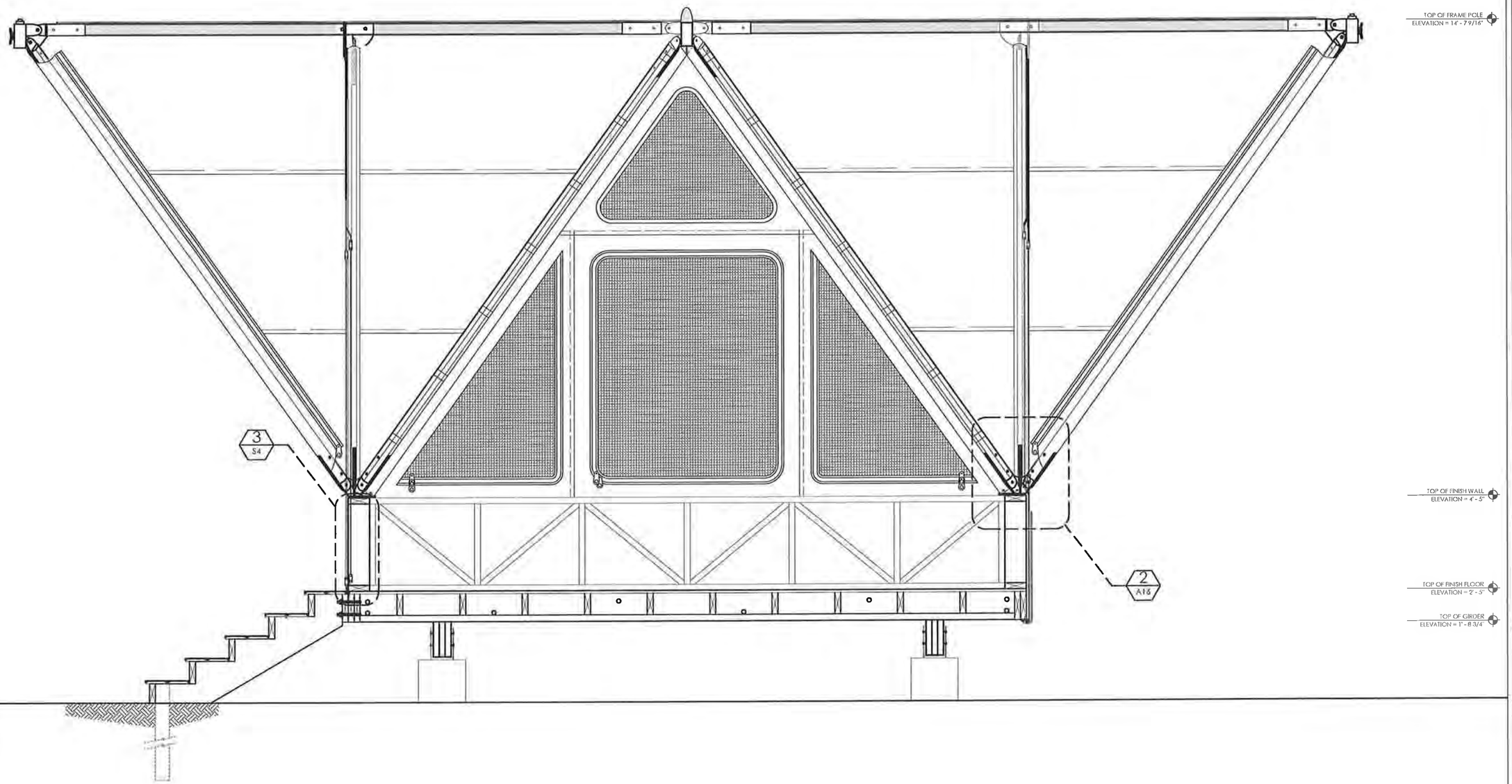

1 / A5 SECTION LOOKING WEST
SCALE : 1" = 1' - 0"

0 1' 2' 4'

EVERGLADES NATIONAL PARK ECO-TENT
UNIVERSITY OF MIAMI DESIGN BUILD
SCHOOL OF ARCHITECTURE

SECTION
LOOKING WEST

DATE: MARCH 3, 2012
SCALE: 1" = 1' - 0'
DRAWN BY: SAM V.
CHECKED BY: MEAGAN S.
REVISIONS: 02_29_12

SHEET NUMBER
A5

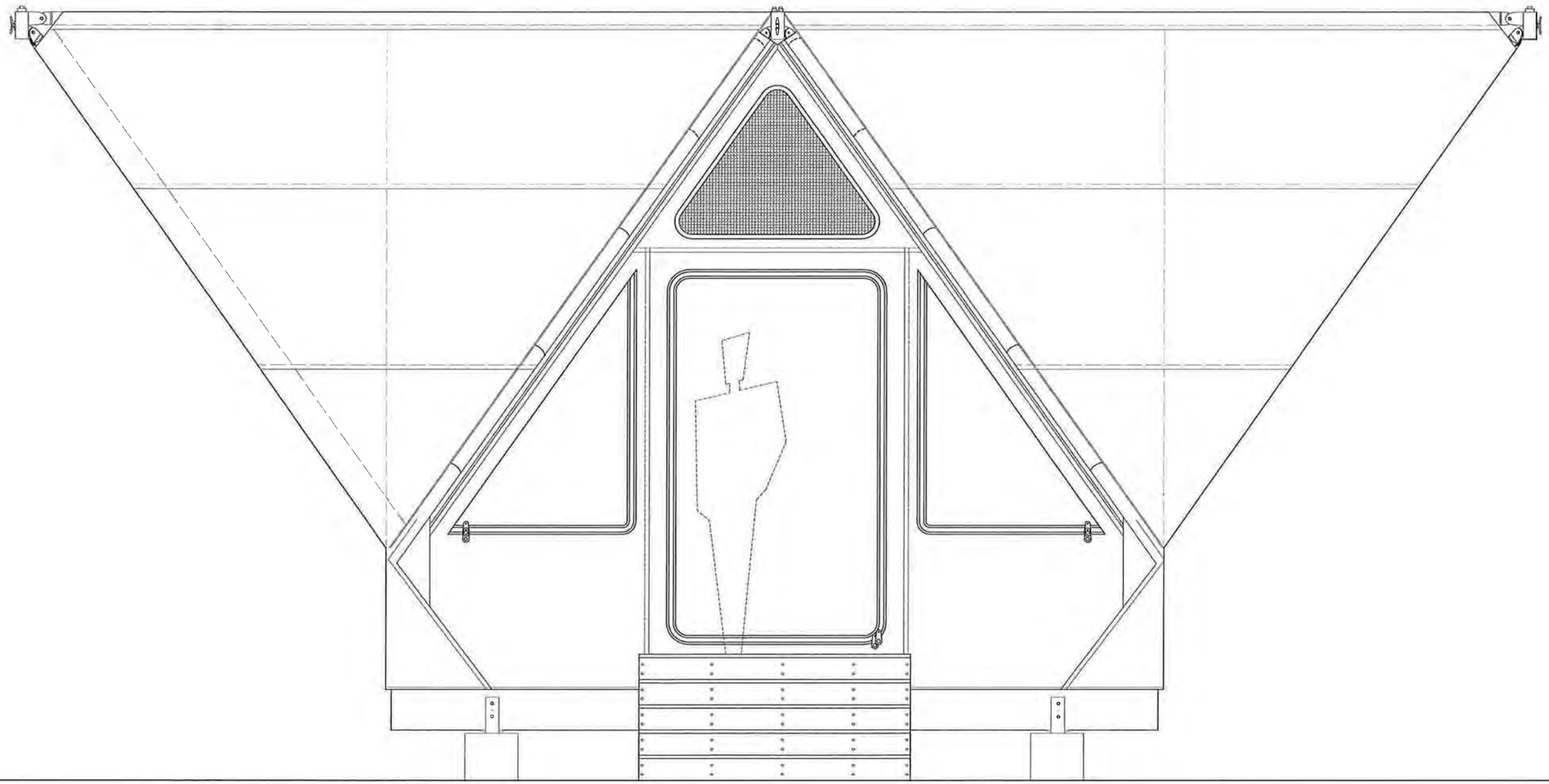

1 / A6 SOUTH ELEVATION
SCALE : 1" = 1' - 0"

0 1' 2' 4'

EVERGLADES NATIONAL PARK ECO-TENT
UNIVERSITY OF MIAMI DESIGN BUILD
SCHOOL OF ARCHITECTURE

SOUTH ELEVATION

DATE: MARCH 3, 2012
SCALE: 1" = 1' - 0"
DRAWN BY: GIANCARLO B.
CHECKED BY: MEAGAN S.
REVISIONS: 02_29_12

SHEET NUMBER
A6

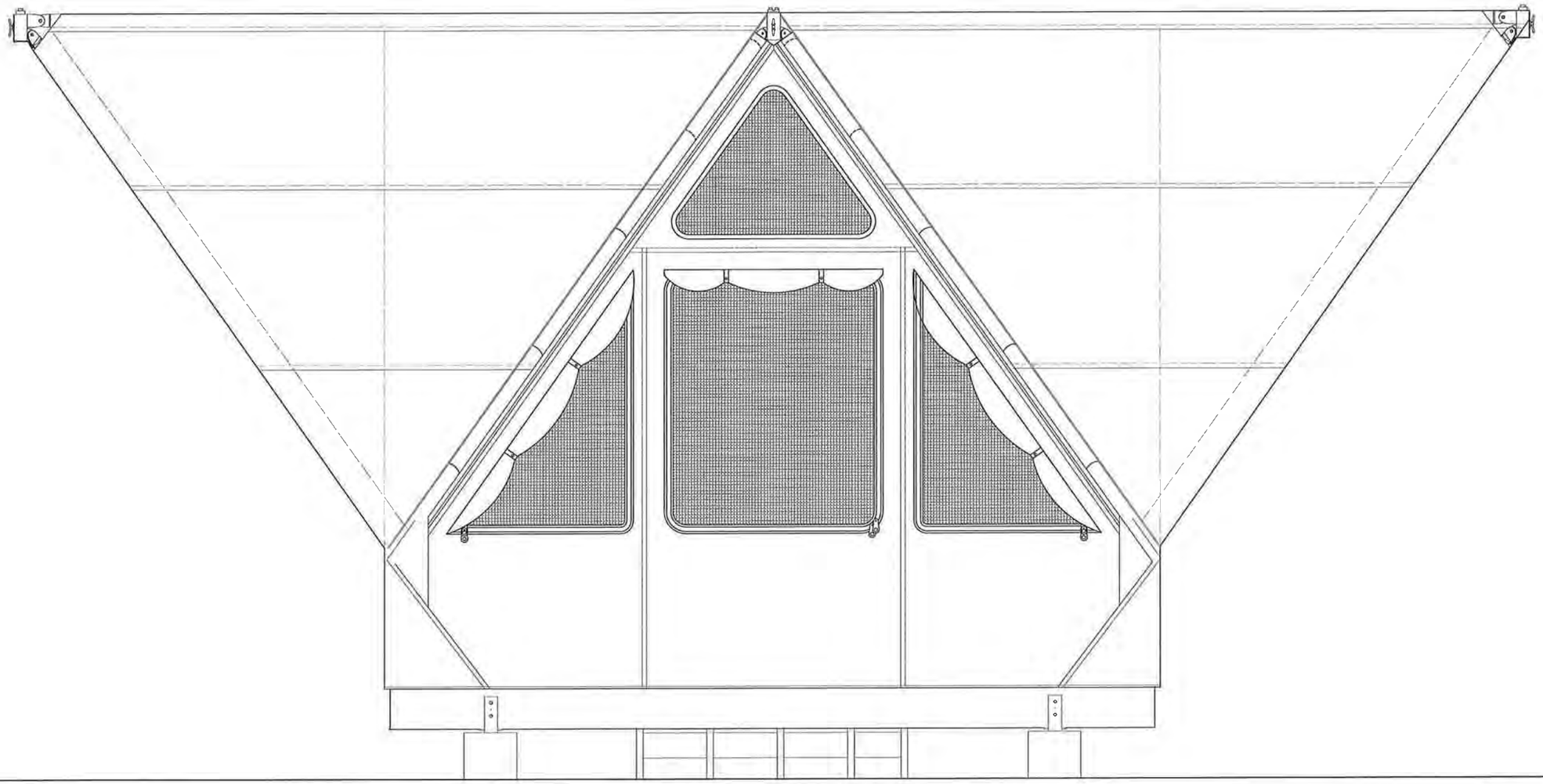

1 / A7 NORTH ELEVATION
SCALE: 1" = 1'-0"

0 1' 2' 4'

EVERGLADES NATIONAL PARK ECO-TENT
UNIVERSITY OF MIAMI DESIGN BUILD
SCHOOL OF ARCHITECTURE

NORTH ELEVATION

DATE: MARCH 3, 2012
SCALE: 1" = 1'-0"
DRAWN BY: GIANCARLO B.
CHECKED BY: MEAGAN S.
REVISIONS: 02_29_12

SHEET NUMBER
A7

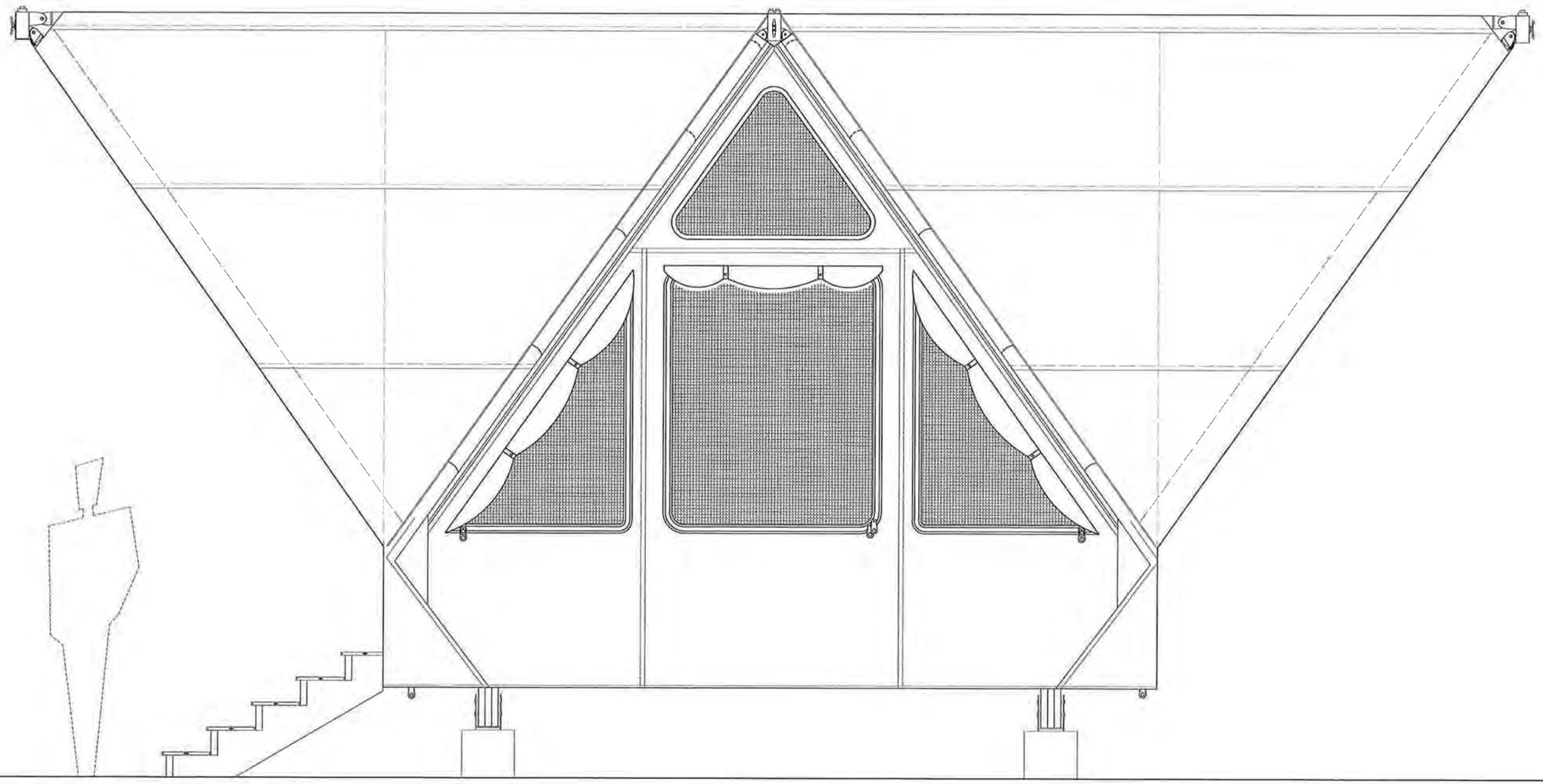

1 / A8 EAST ELEVATION
SCALE: 1" = 1'-0"

0 1' 2' 4'

EVERGLADES NATIONAL PARK ECO-TENT
UNIVERSITY OF MIAMI DESIGN BUILD
SCHOOL OF ARCHITECTURE

EAST ELEVATION

DATE: MARCH 3, 2012
SCALE: 1" = 1'-0"
DRAWN BY: GIANCARLO B.
CHECKED BY: MEAGAN S.
REVISIONS: 02_29_12

SHEET NUMBER
A8

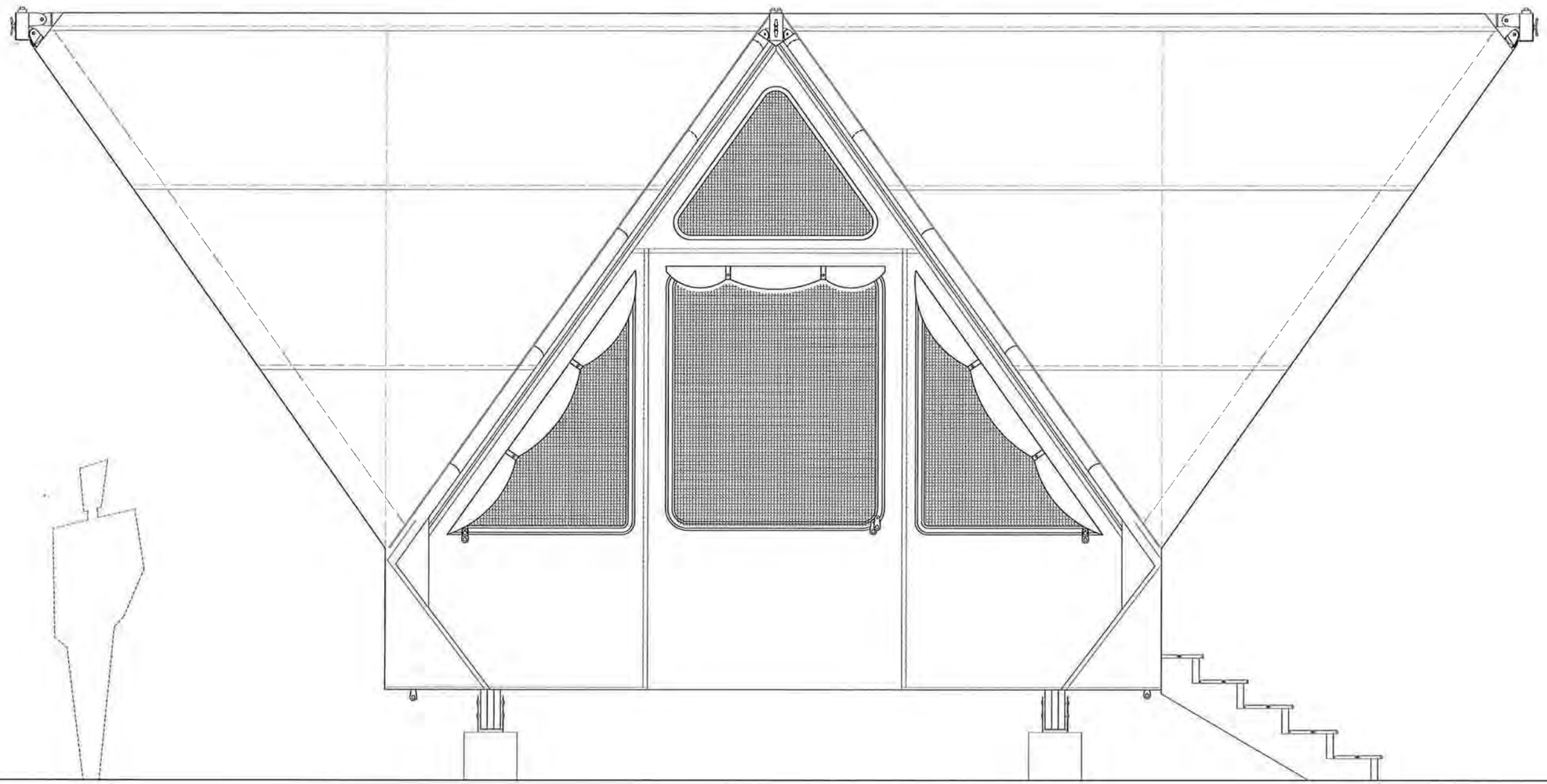

1 / A9 WEST ELEVATION
SCALE : 1" = 1' - 0"

0 1' 2' 4'

EVERGLADES NATIONAL PARK ECO-TENT
UNIVERSITY OF MIAMI DESIGN BUILD
SCHOOL OF ARCHITECTURE

WEST ELEVATION

DATE: MARCH 3, 2012
SCALE: 1" = 1' - 0"
DRAWN BY: GIANCARLO B.
CHECKED BY: MEAGAN S.
REVISIONS: 02_29_12

SHEET NUMBER
A9

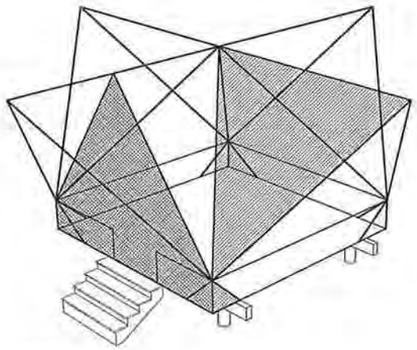

TYP. CANVAS ROOF PANEL (1 OF 8)
WALL TENT PANEL

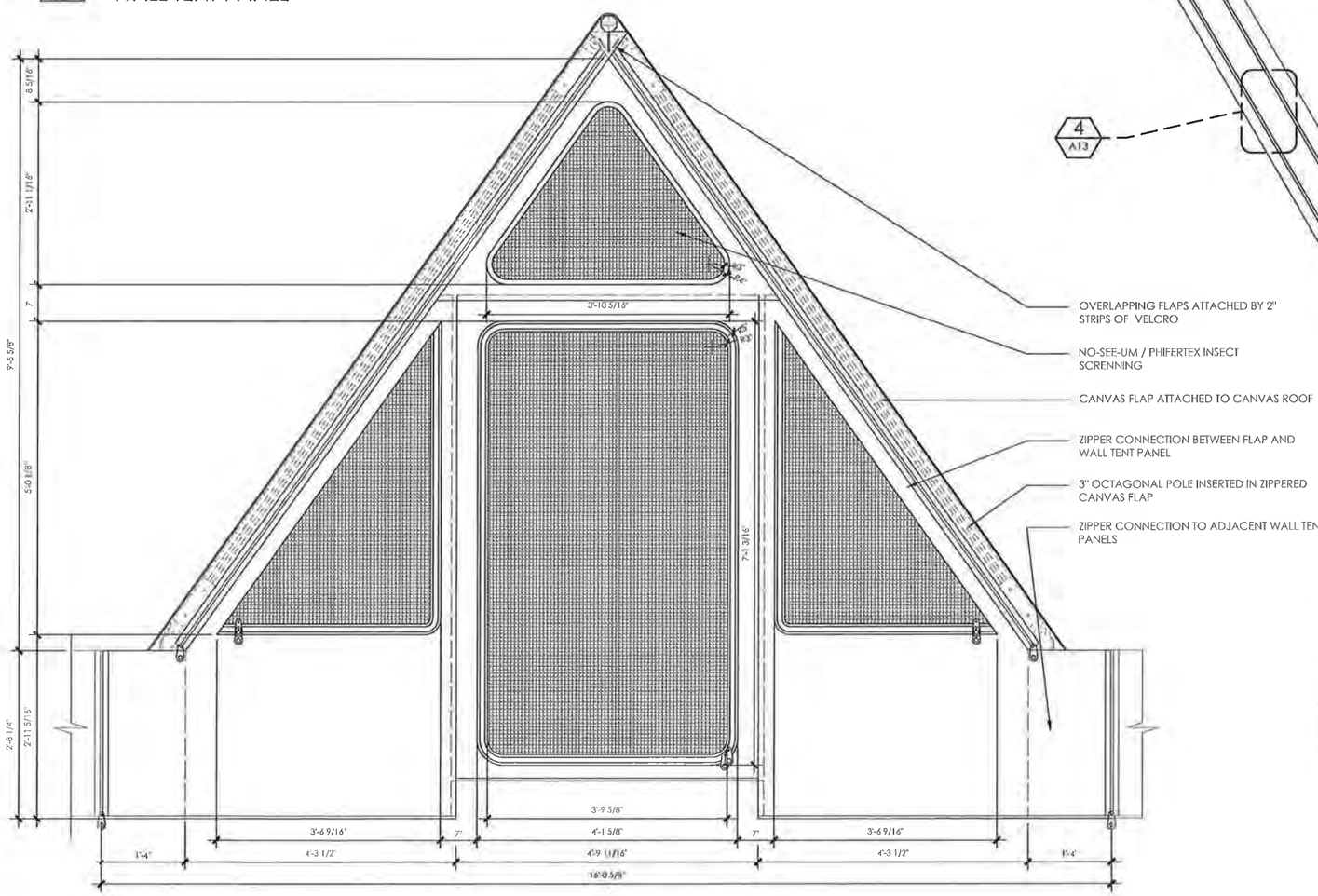

1 A10 WALL TENT PANEL : ENTRANCE
SCALE : 1" = 1' - 0"

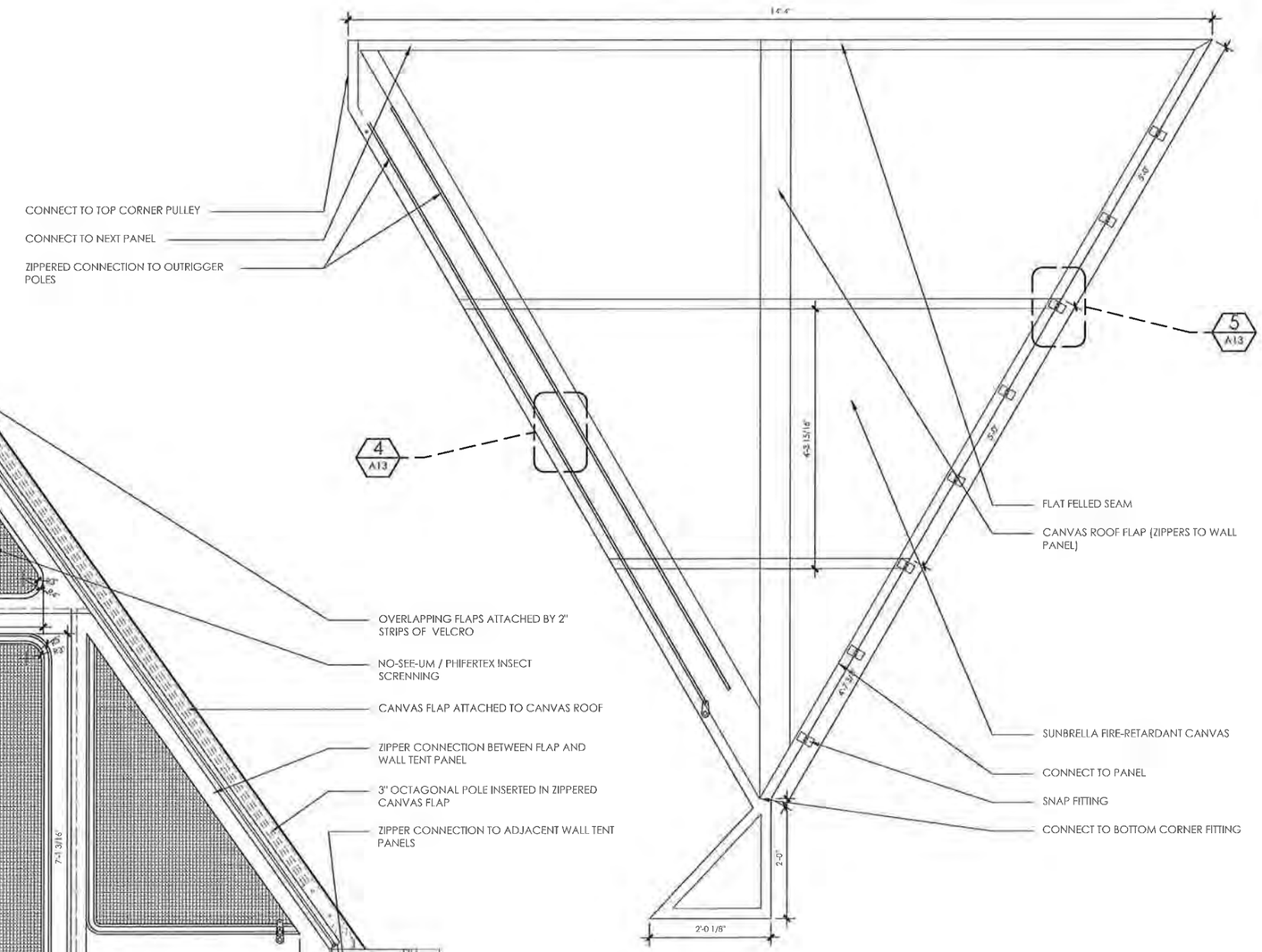

2 A10 TYP. CANVAS ROOF PANEL (1 OF 8)
SCALE : 1" = 1' - 0"

EVERGLADES NATIONAL PARK ECO-TENT
UNIVERSITY OF MIAMI DESIGN BUILD
SCHOOL OF ARCHITECTURE

WALL TENT PANELS

DATE: MARCH 3, 2012
SCALE: 1" = 1' - 0"
DRAWN BY: VIOLET B.
CHECKED BY: MEAGAN S.
REVISIONS: 02_29_12

SHEET NUMBER
A10

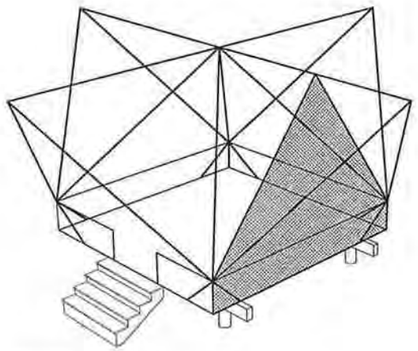

TYP. CANVAS ROOF PANEL (1 OF 8)
WALL TENT PANEL

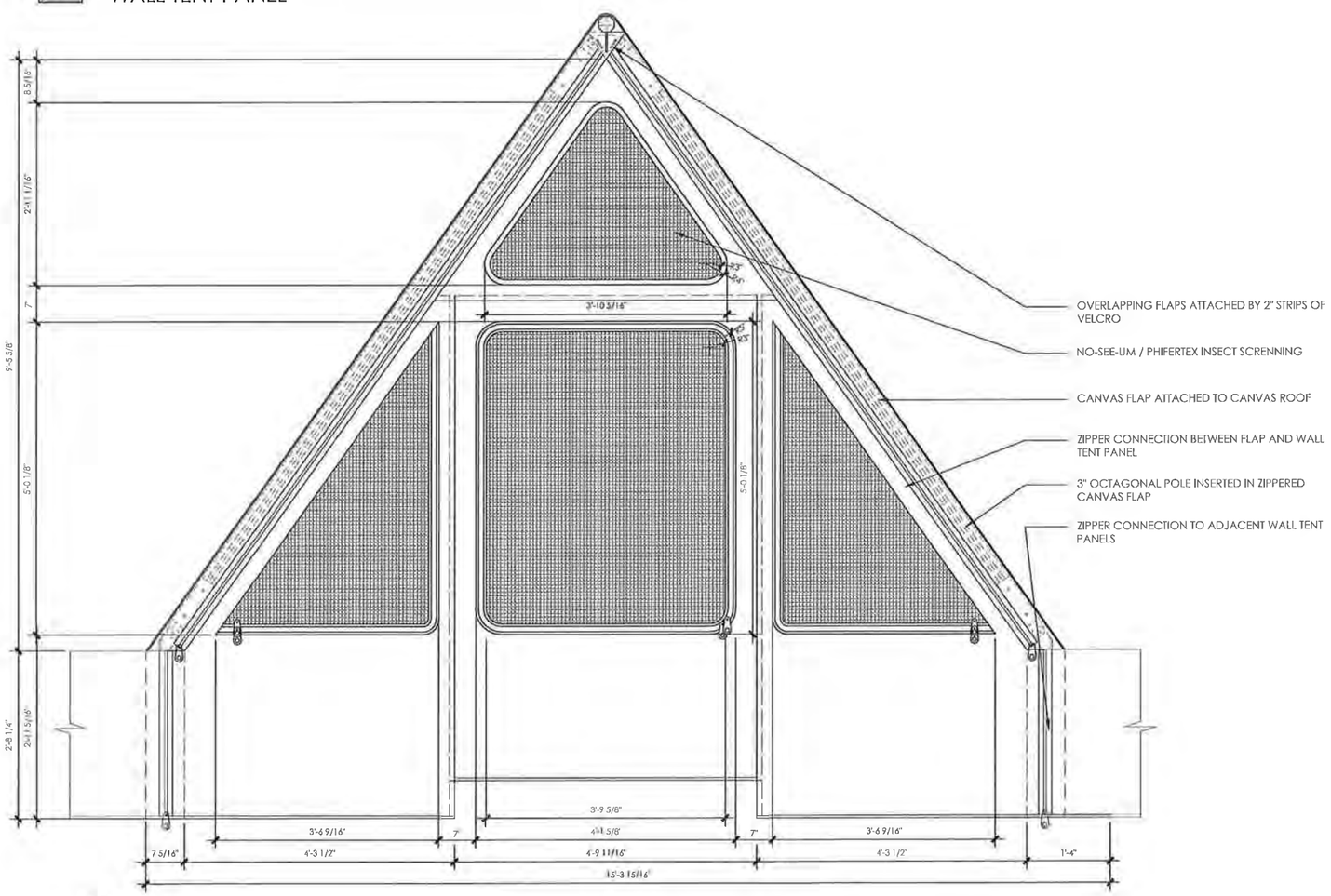

1 / A11 DETAIL : WALL TENT PANELS
SCALE : 1" = 1' - 0"

CANVAS ROOF PANEL	
Material	Sunbrella (Solution Dyed Acrylic)
Width	60 inches
Length	10 yards per panel 8 panels per tent 80 yards per tent + 10% wastage 88 yards per tent
Weight	11 oz per square yard 1616 oz / 101 pounds per tent

CANVAS ON WALL TENT PANEL	
Material	Sunbrella (Solution Dyed Acrylic)
Width	60 inches
Length	9 yards per panel 4 panels per tent 36 yards per tent + 10% wastage 40 yards per tent
Weight	11 oz per square yard 748 oz / 47 pounds per tent

INSECT SCREENING ON WALL TENT PANEL	
Material	Phifertex
Width	54 inches
Length	30 yards per tent
Weight	12 oz per square yard 540 oz / 34 pounds per tent

EVERGLADES NATIONAL PARK ECO-TENT
UNIVERSITY OF MIAMI DESIGN BUILD
SCHOOL OF ARCHITECTURE

WALL TENT PANELS

DATE: MARCH 3, 2012
SCALE: 1" = 1' - 0"
DRAWN BY: VIOLET B.
CHECKED BY: MEAGAN S.
REVISIONS: 02.29.12

SHEET NUMBER
A11

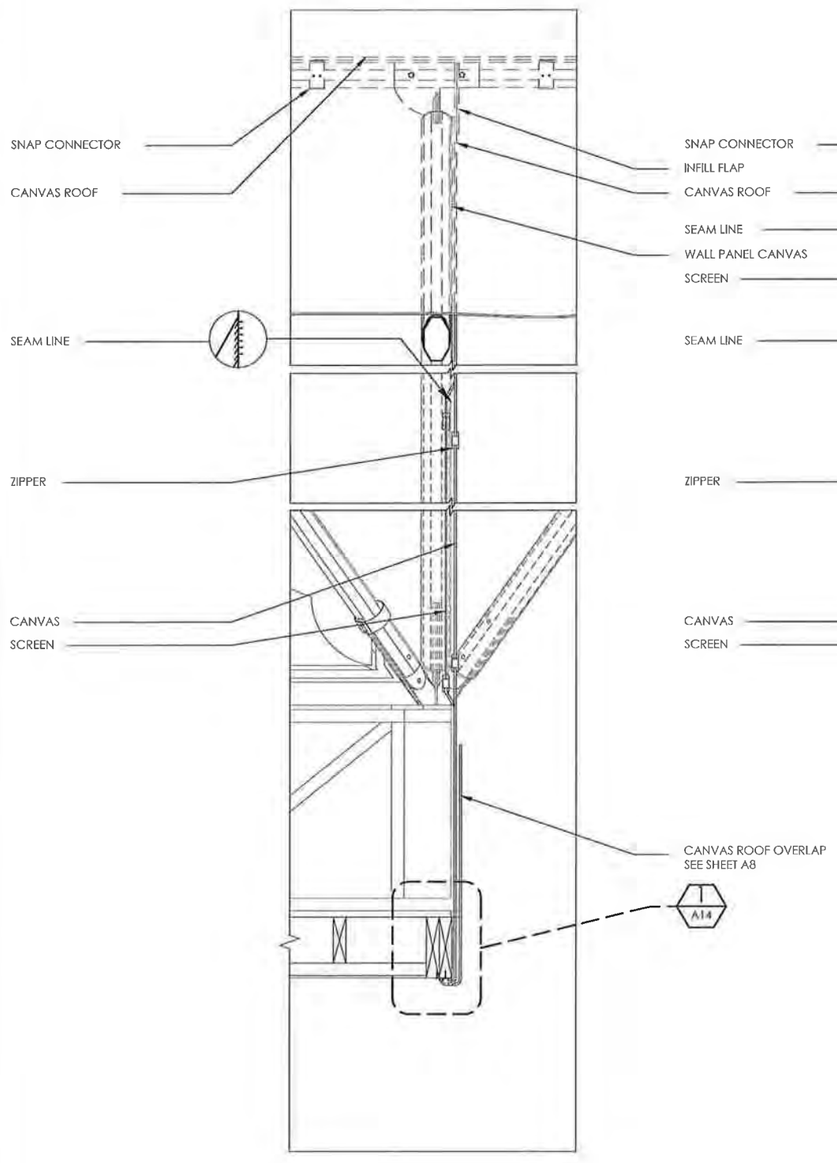

1 A12 DETAIL : WALL TENT PANELS
SCALE : 1 1/2" = 1' - 0"

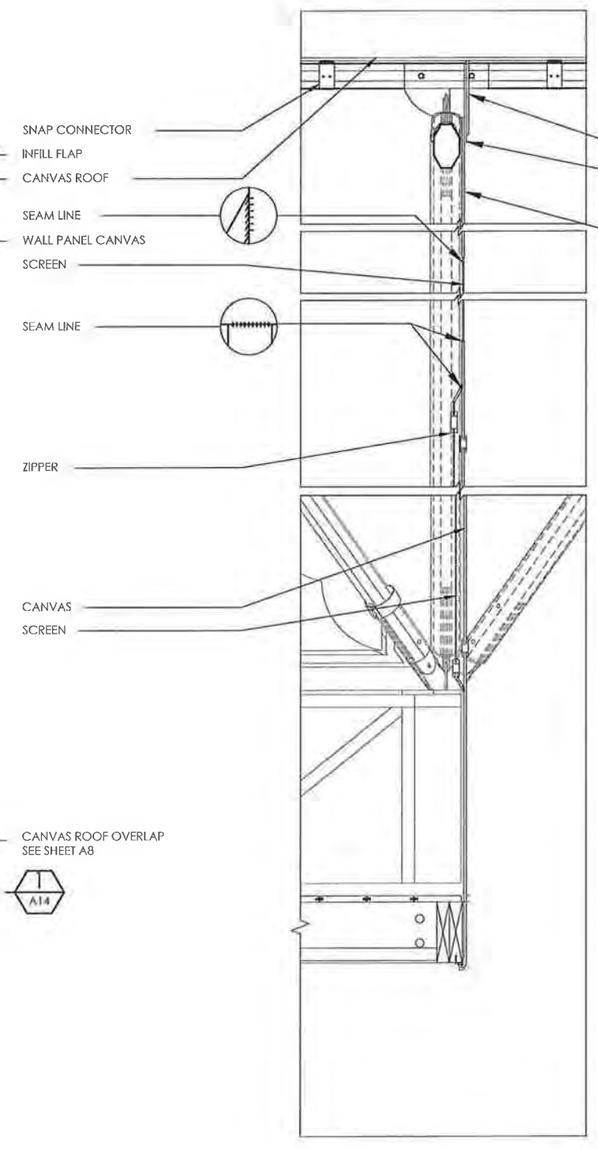

2 A12 DETAIL : CANVAS INFILL WALL
SCALE : 1 1/2" = 1' - 0"

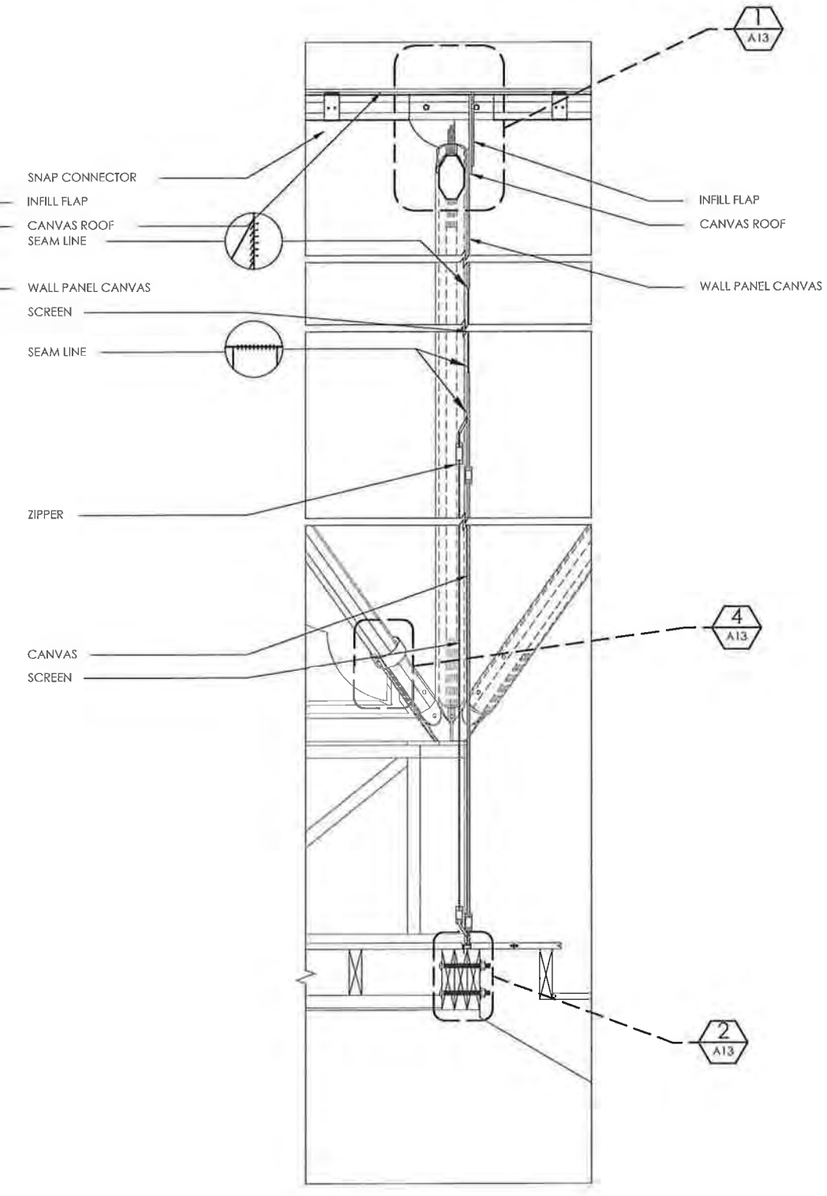

3 A12 DETAIL : DOOR TENT PANELS
SCALE : 1 1/2" = 1' - 0"

EVERGLADES NATIONAL PARK ECO-TENT
UNIVERSITY OF MIAMI DESIGN BUILD
SCHOOL OF ARCHITECTURE

WALL TENT
DETAILS

DATE: MARCH 2, 2012
SCALE: 1 1/2" = 1' - 0"
DRAWN BY: CATHERINE O.
CHECKED BY: MEAGAN S.
REVISIONS: 02_29_12

SHEET NUMBER
A12

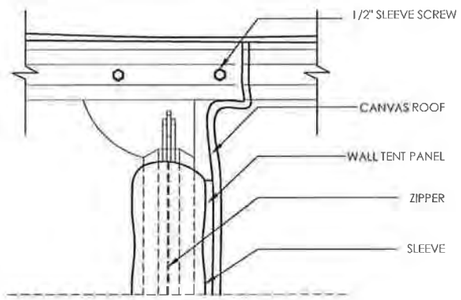

1 / A13 DETAIL : INFILL WALL POLE @ RIDGE
SCALE : 3" = 1' - 0"

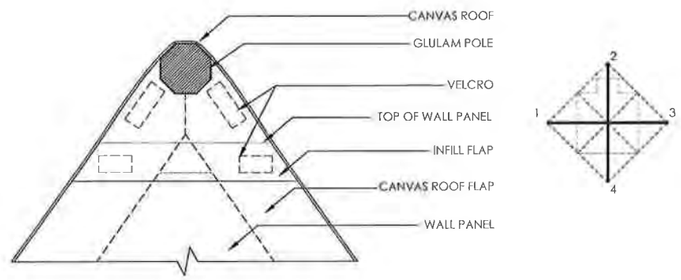

3 / A13 DETAIL : RIDGE W/INFILL WALL FITTINGS & RIDGE POLE
SCALE : 3" = 1' - 0"

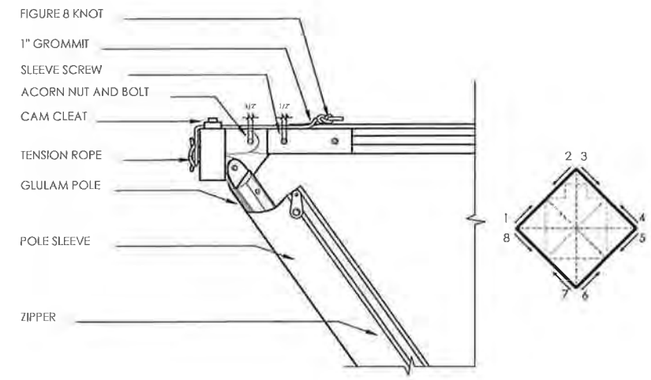

5 / A13 DETAIL : ZIPPED CONNECTION @ OUTRIGGER POLES
SCALE : 1 1/2" = 1' - 0"

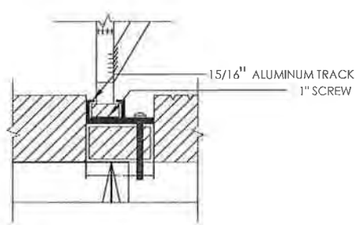

2 / A13 DETAIL : CANVAS @ DOOR SILL
SCALE : 1' - 0" = 1' - 0"

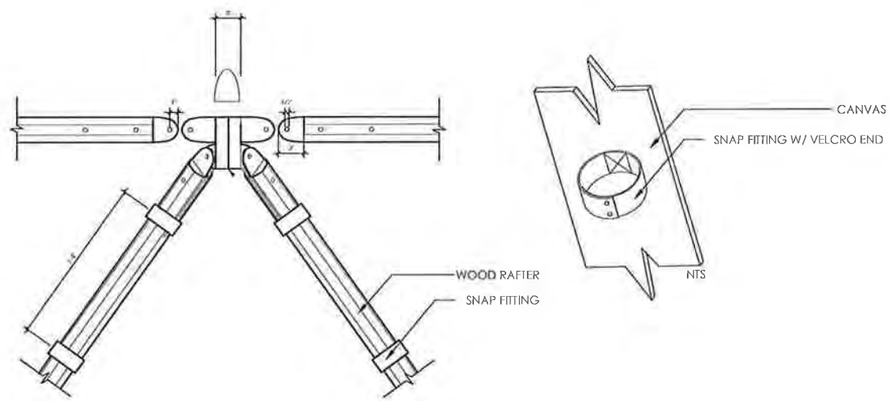

4 / A13 DETAIL : VELCRO FITTING @ RAFTERS & RIDGE POLES
SCALE : 1 1/2" = 1' - 0"

EVERGLADES NATIONAL PARK ECO-TENT
UNIVERSITY OF MIAMI DESIGN BUILD
SCHOOL OF ARCHITECTURE

CANOPY
CONNECTIONS

DATE: MARCH 3, 2012
SCALE: SEE SHEET
DRAWN BY: CATHERINE O.
CHECKED BY: MEAGAN S.
REVISIONS: 02_29_12

SHEET NUMBER
A13

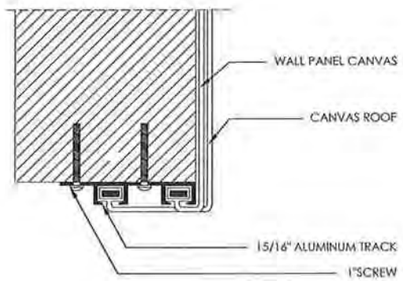

1 A14 DETAIL: WALL CANVAS @ UNDERSIDE OF EXTERNAL WALL
SCALE : 1"-0" = 1"-0"

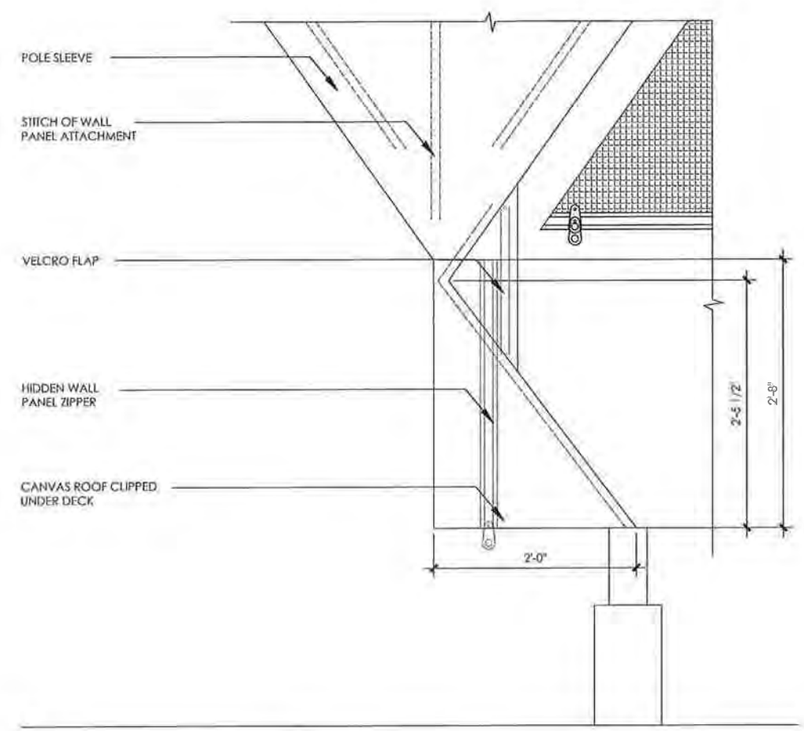

2 A14 DETAIL : CORNER CASE CONNECTION OF THE CANVAS ROOF TO WALL PANEL
SCALE : 1 1/2" = 1"-0"

EVERGLADES NATIONAL PARK ECO-TENT
UNIVERSITY OF MIAMI DESIGN BUILD
SCHOOL OF ARCHITECTURE

CANOPY CONNECTIONS

DATE: MARCH 3, 2012
SCALE: 1 1/2" = 1'-0"
DRAWN BY: VIOLET B.
CHECKED BY: MEAGAN S.
REVISIONS: 03_29_12

SHEET NUMBER
A14

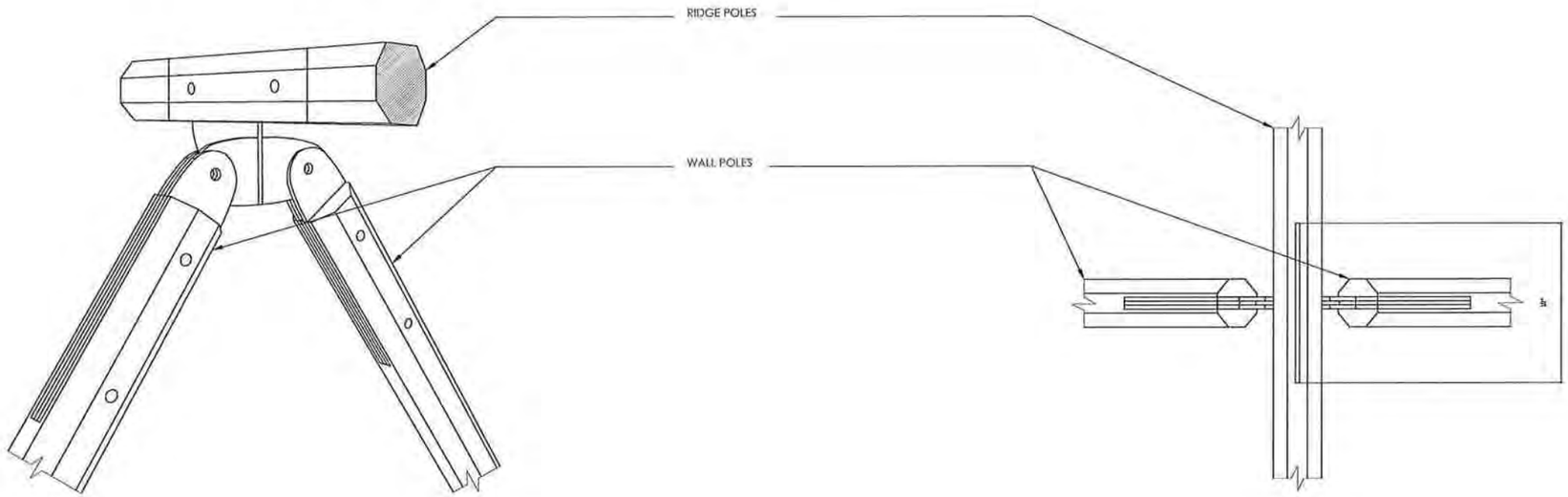

3D VIEW/NTS

TOP VIEW

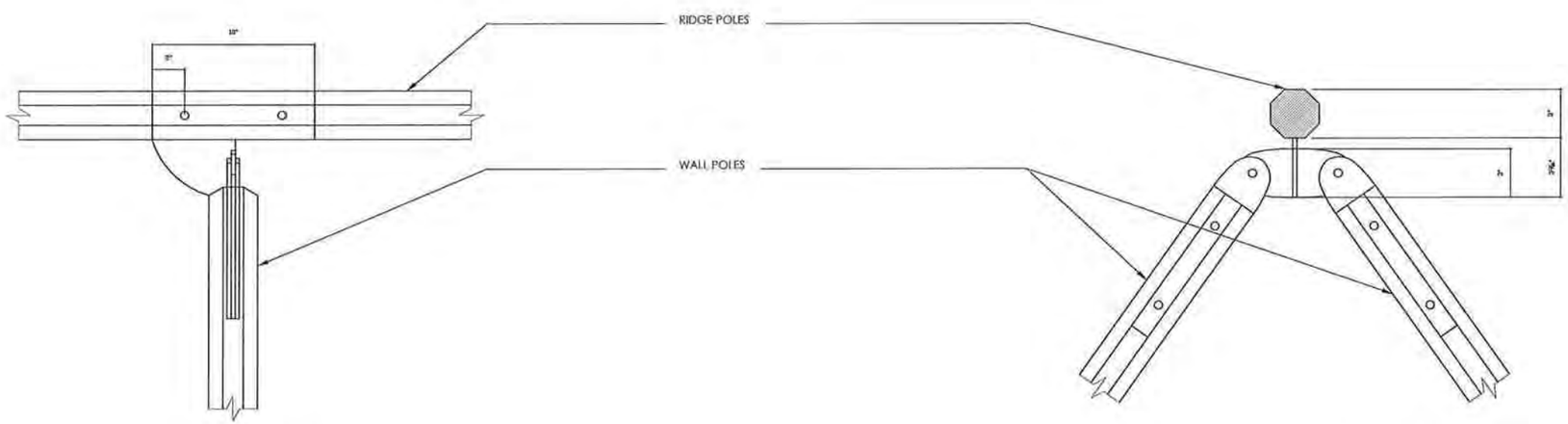

SIDE VIEW

SIDE VIEW

T
A15
WALL CONNECTORS AT RIDGE
SCALE: 3" = 1'-0"

EVERGLADES NATIONAL PARK ECO-TENT
UNIVERSITY OF MIAMI DESIGN BUILD
SCHOOL OF ARCHITECTURE

CONNECTION DETAILS

DATE: MARCH 3, 2012
SCALE: 3" = 1'-0"
DRAWN BY: CATHERINE O.
CHECKED BY: MEAGAN E.
REVISIONS: 02_29_12

SHEET NUMBER
A15

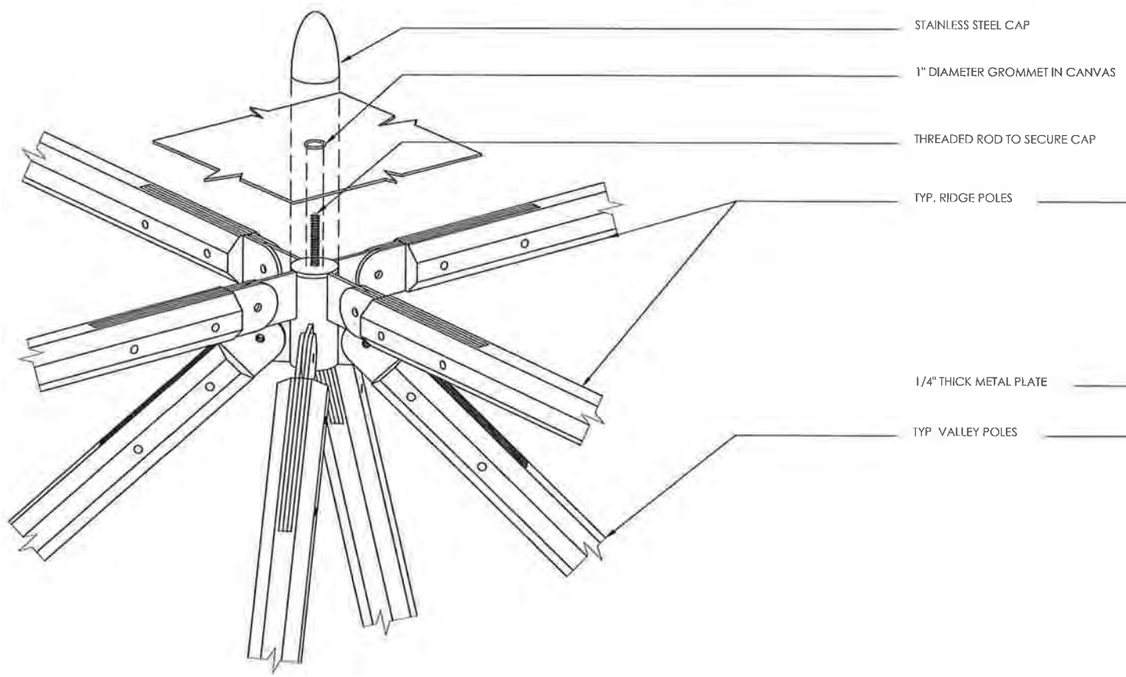

3D VIEW/NTS

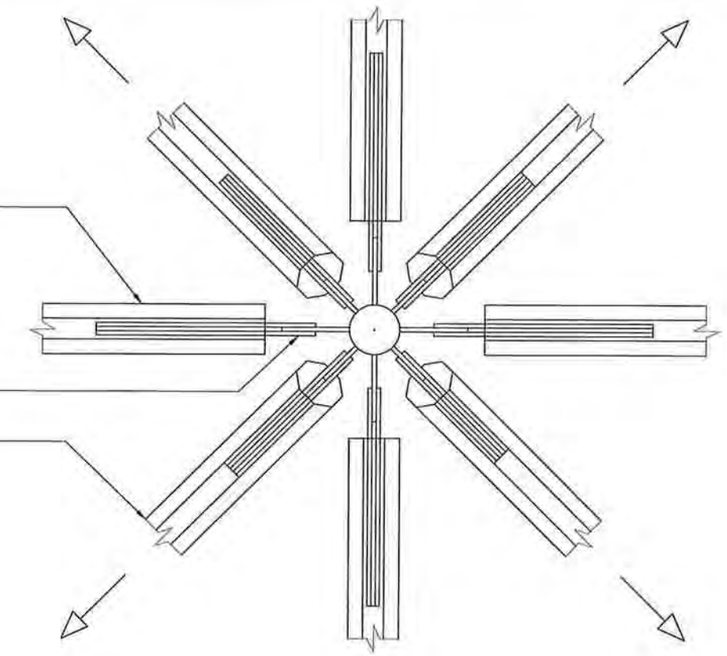

TOP VIEW

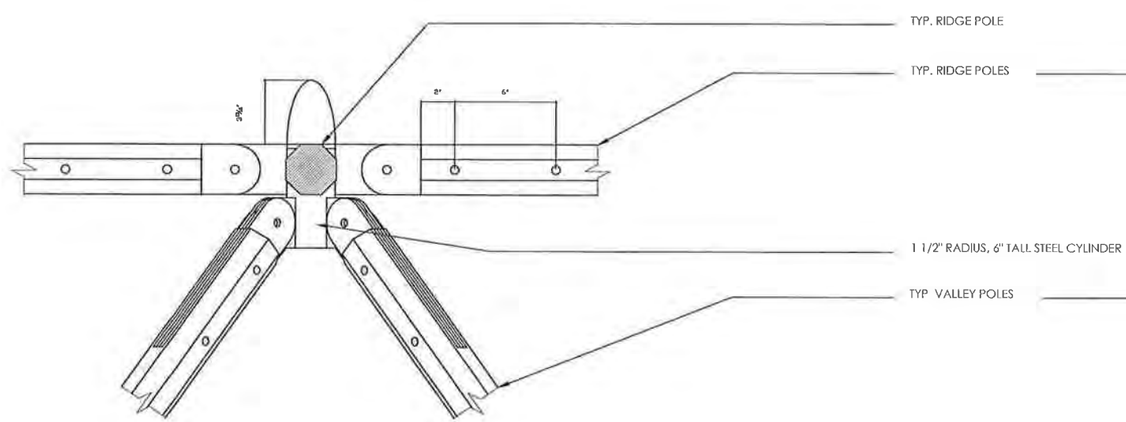

SIDE VIEW

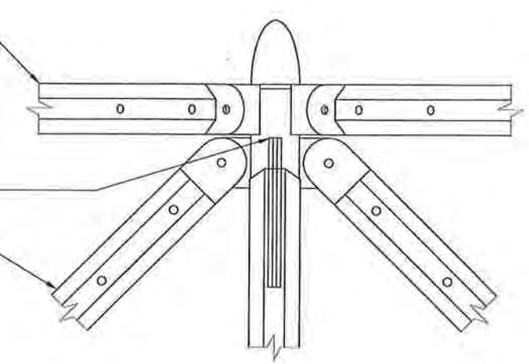

SIDE VIEW

T
A16

CENTER CONNECTORS
SCALE : 3" = 1' - 0"

EVERGLADES NATIONAL PARK ECO-TENT
UNIVERSITY OF MIAMI DESIGN BUILD
SCHOOL OF ARCHITECTURE

CONNECTION DETAILS

DATE: MARCH 3, 2012
SCALE: 3" = 1' - 0"
DRAWN BY: VICKEY B.
CHECKED BY: MEAGAN S.
REVISIONS: 02_29_12

SHEET NUMBER
A16

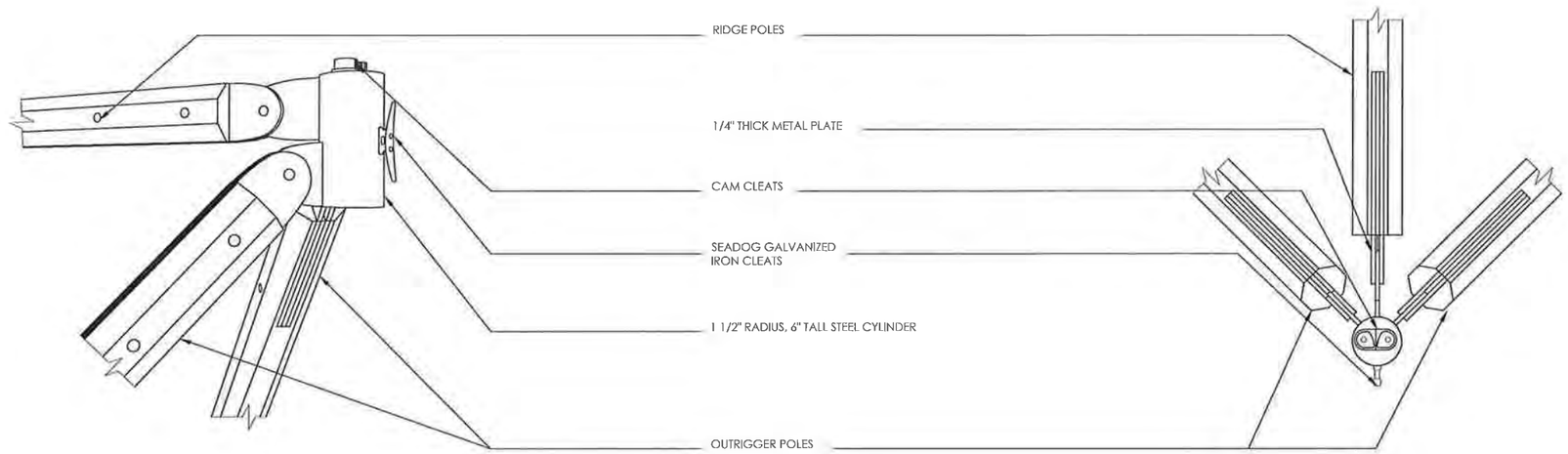

3D VIEW/NTS

TOP VIEW

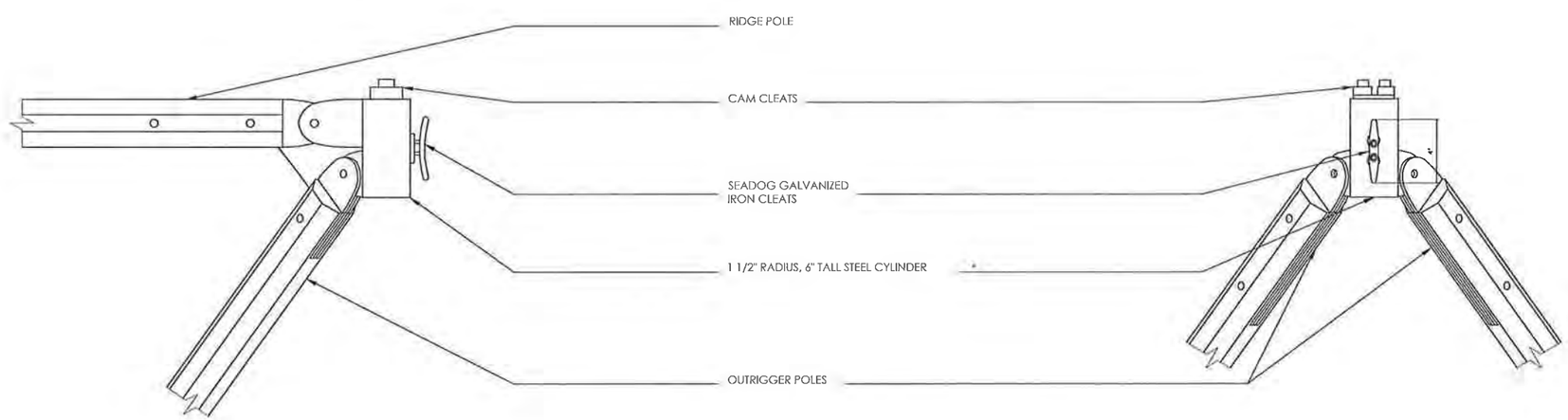

SIDE VIEW

SIDE VIEW

1 A17 CORNER CONNECTORS
SCALE : 3" = 1' - 0"

EVERGLADES NATIONAL PARK ECO-TENT
UNIVERSITY OF MIAMI DESIGN BUILD
SCHOOL OF ARCHITECTURE

CONNECTION DETAILS

DATE: MARCH 3, 2012
SCALE: 3" = 1' - 0"
DRAWN BY: KELLY S
CHECKED BY: MEAGAN S
REVISION 5: 02_29_12

SHEET NUMBER
A17

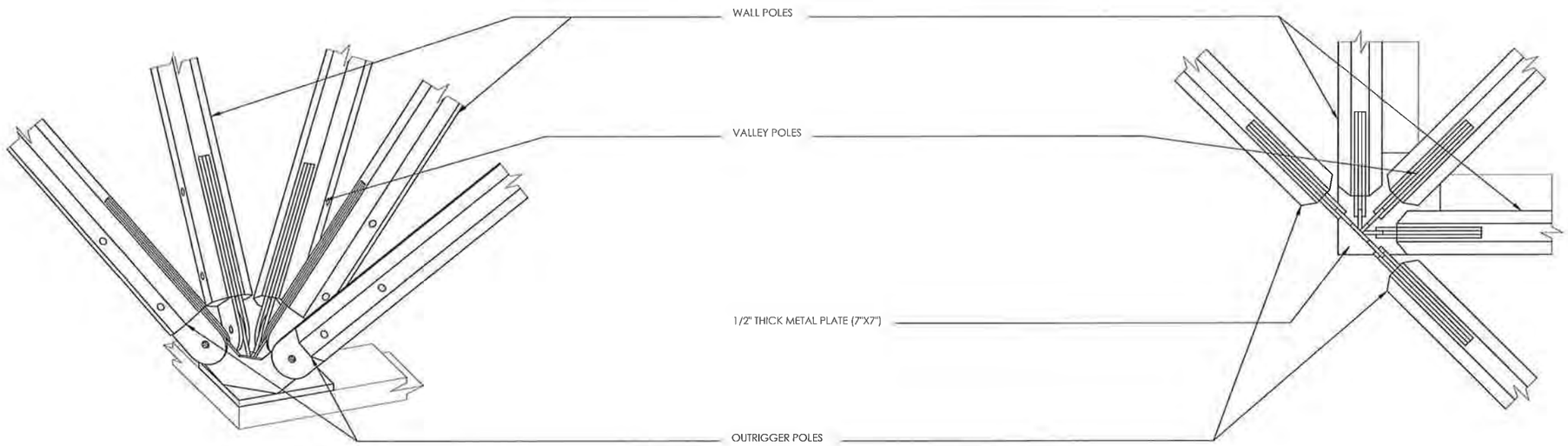

3D VIEW/NTS

TOP VIEW

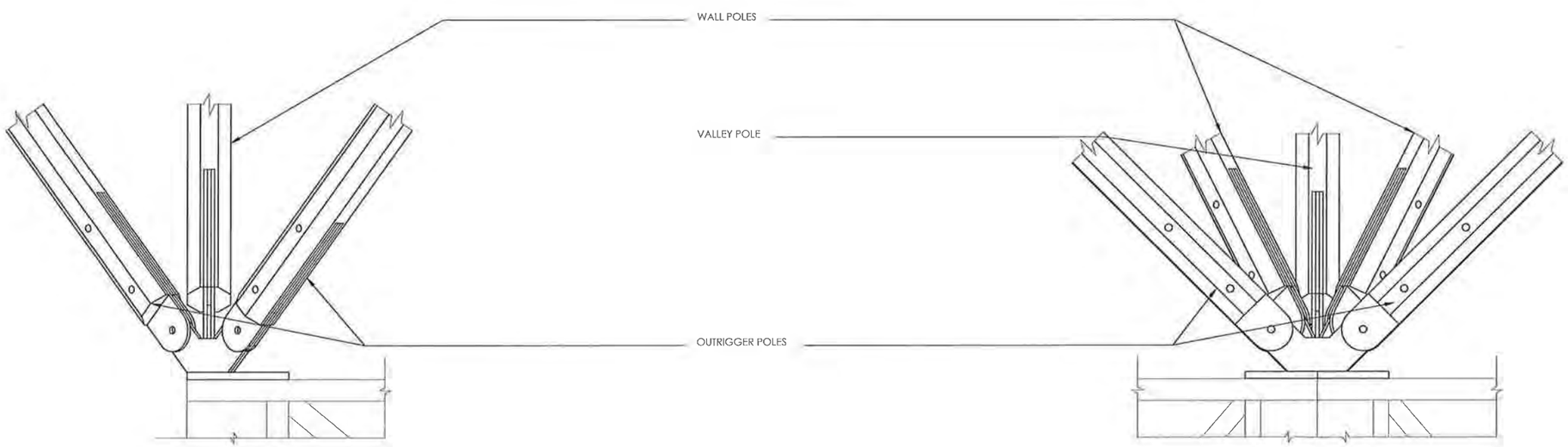

SIDE VIEW

FRONT VIEW (FROM CORNER)

A18 BASE CORNER CONNECTOR
SCALE : 3" = 1' - 0"

EVERGLADES NATIONAL PARK ECO-TENT
UNIVERSITY OF MIAMI DESIGN BUILD
SCHOOL OF ARCHITECTURE

CONNECTION DETAILS

DATE: MARCH 3, 2012
SCALE: 3" = 1' - 0"
DRAWN BY: HAO L.
CHECKED BY: MEAGAN S.
REVISIONS: 02.29.12

SHEET NUMBER
A18

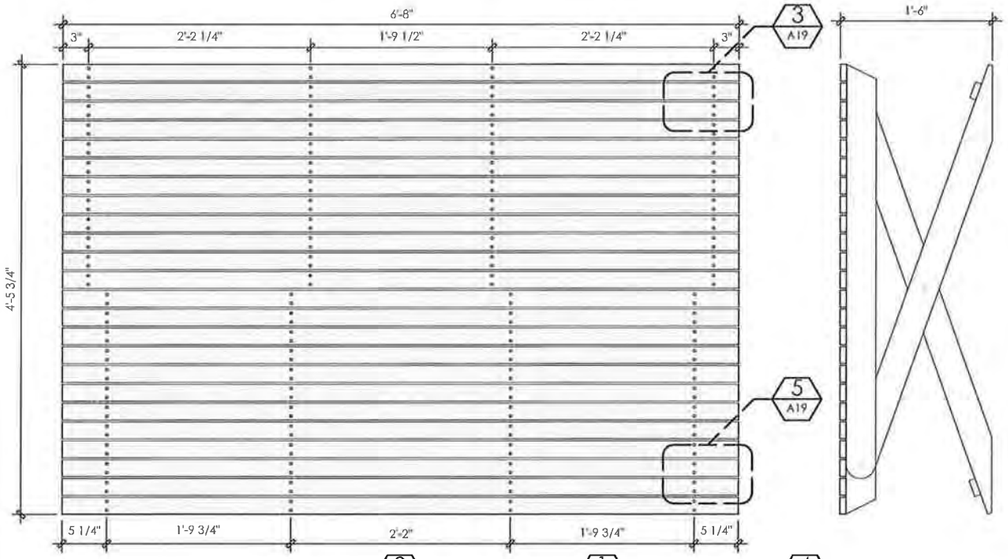

PLAN VIEW : UNFOLDED

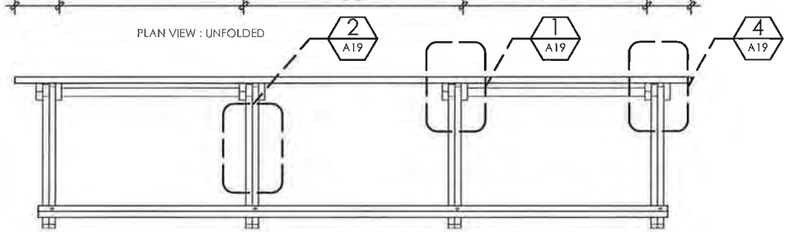

SIDE VIEW : UNFOLDED

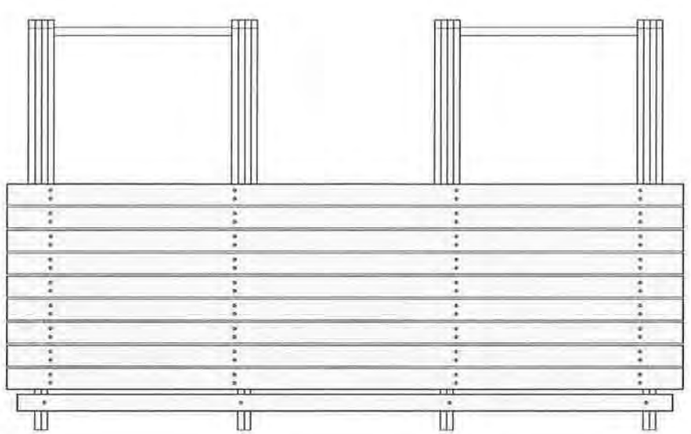

SIDE VIEW : FOLDED

1 S19 CAMPAIGN BED
SCALE : 1 1/2" = 1' - 0"

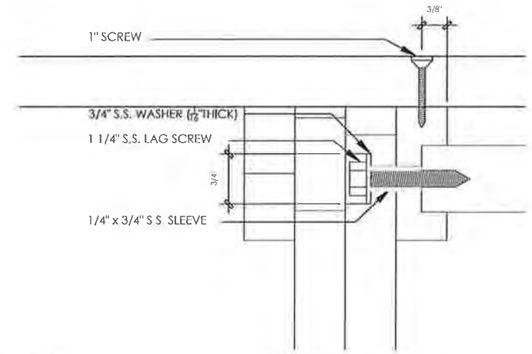

1 A19 DETAIL OF DOWEL CONNECTION
SCALE : 1' - 0" = 1' - 0"

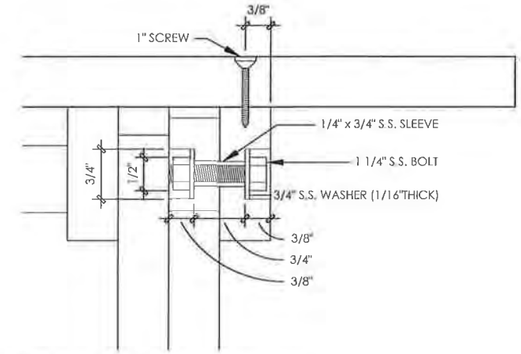

4 A19 DETAIL OF TOP HINGE
SCALE : 1' - 0" = 1' - 0"

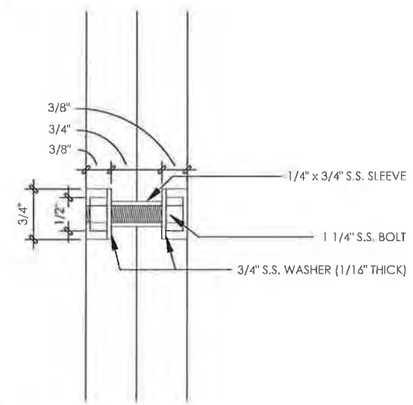

2 A19 DETAIL OF LEG HINGE
SCALE : 1' - 0" = 1' - 0"

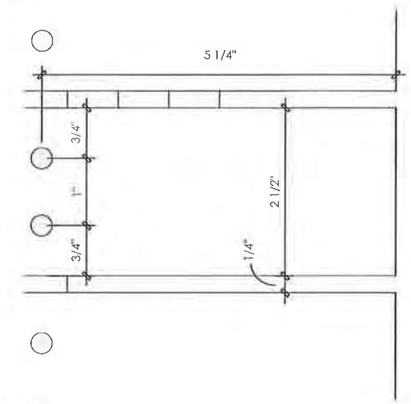

5 A19 DETAIL OF SCREW PLACEMENT
SCALE : 1' - 0" = 1' - 0"

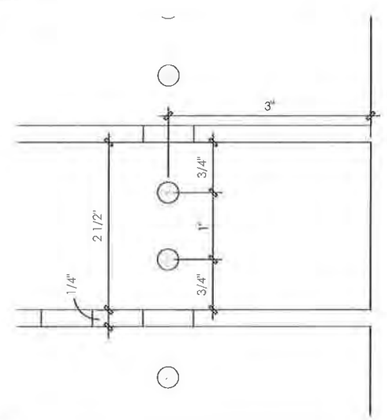

3 A19 DETAIL OF SCREW PLACEMENT
SCALE : 1' - 0" = 1' - 0"

EVERGLADES NATIONAL PARK ECO-TENT
UNIVERSITY OF MIAMI DESIGN BUILD
SCHOOL OF ARCHITECTURE

FURNITURE SET
BED

DATE: MARCH 2, 2012
SCALE: SEE SHEET
DRAWN BY: MIKE G.
CHECKED BY: MEAGAN S.
REVISIONS: 02_29_12

SHEET NUMBER
A19

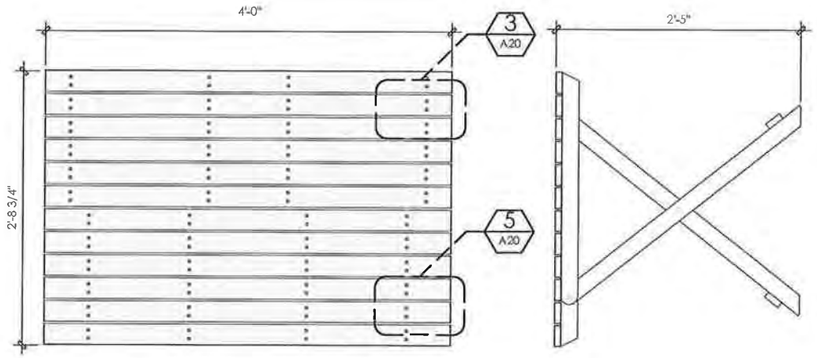

PLAN VIEW : UNFOLDED

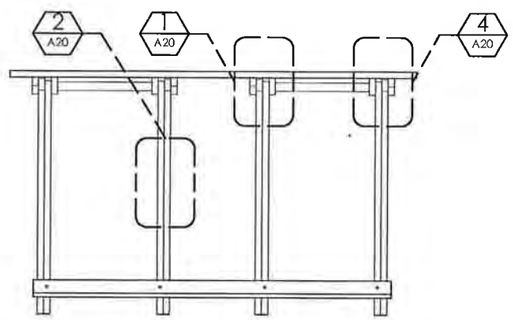

SIDE VIEW : UNFOLDED

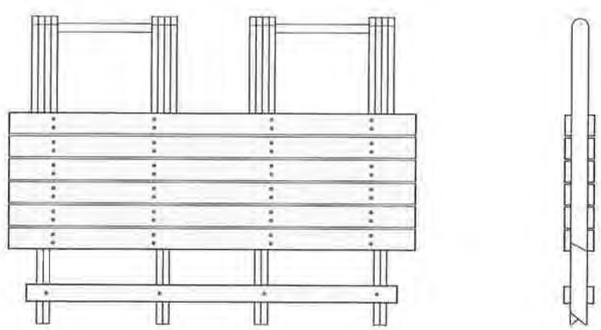

SIDE VIEW : FOLDED

1 S20 CAMPAIGN TABLE
SCALE : 1 1/2" = 1' - 0"

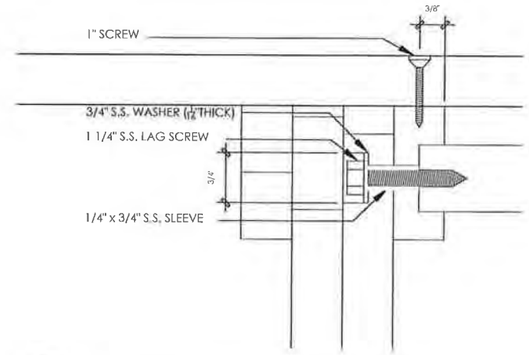

1 A20 DETAIL OF DOWEL CONNECTION
SCALE : 1' = 1' - 0"

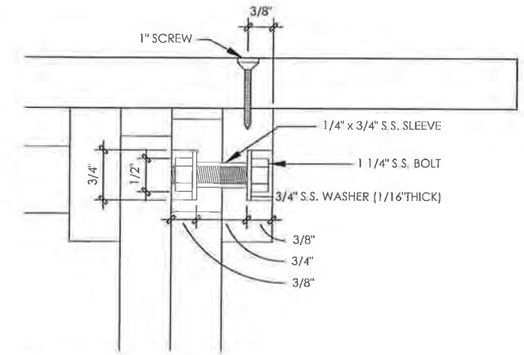

4 A20 DETAIL OF TOP HINGE
SCALE : 1" = 1" - 0"

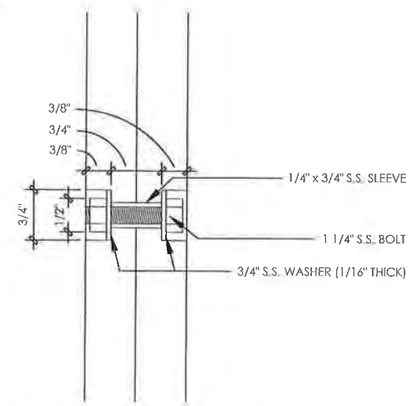

2 A20 DETAIL OF LEG HINGE
SCALE : 1' = 1' - 0"

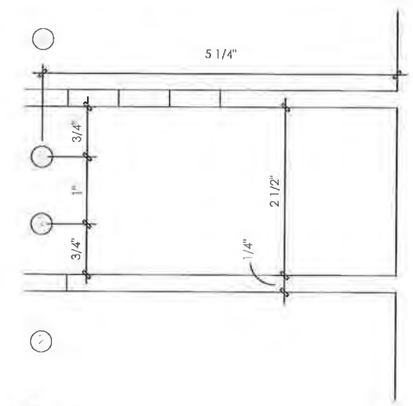

5 A20 DETAIL OF SCREW PLACEMENT
SCALE : 1' = 1' - 0"

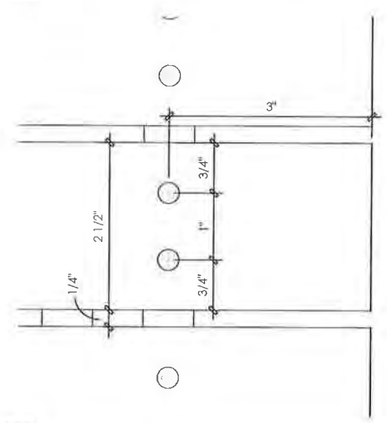

3 A20 DETAIL OF SCREW PLACEMENT
SCALE : 1' - 0" = 1' - 0"

EVERGLADES NATIONAL PARK ECO-TENT
UNIVERSITY OF MIAMI DESIGN BUILD
SCHOOL OF ARCHITECTURE

FURNITURE SET
TABLE

DATE: MARCH 2, 2012
SCALE: SEE SHEET
DRAWN BY: MIKE G.
CHECKED BY: MEAGAN S.
REVISION 8: 02_29_12

SHEET NUMBER
A20

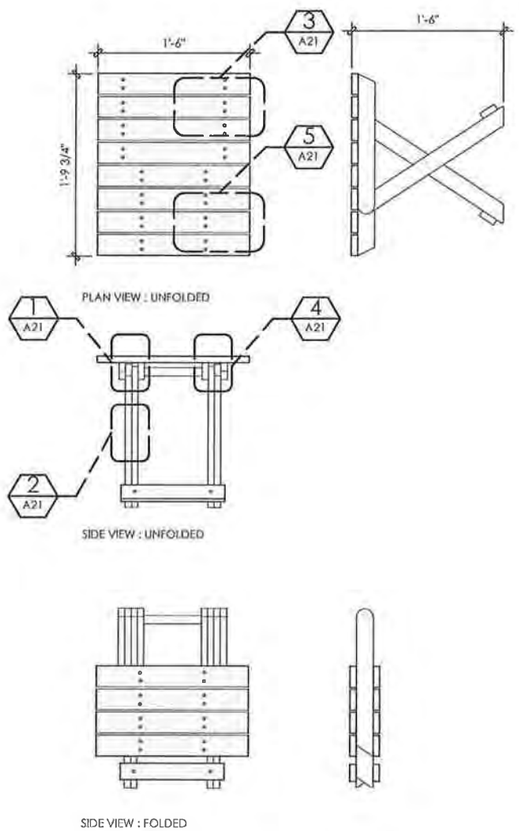

1 A21 CAMPAIGN STOOL
SCALE : 1 1/2" = 1' - 0"

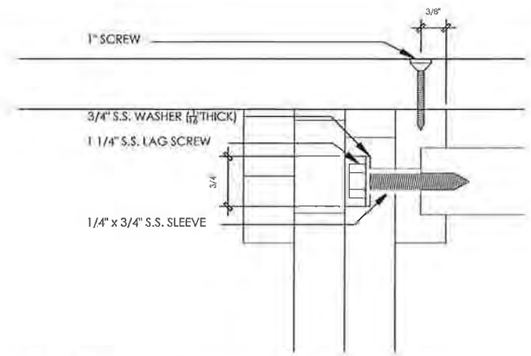

1 A21 DETAIL OF DOWEL CONNECTION
SCALE : 1' - 0" = 1' - 0"

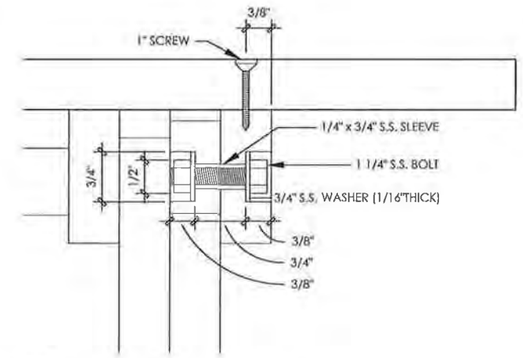

4 A21 DETAIL OF TOP HINGE
SCALE : 1' - 0" = 1' - 0"

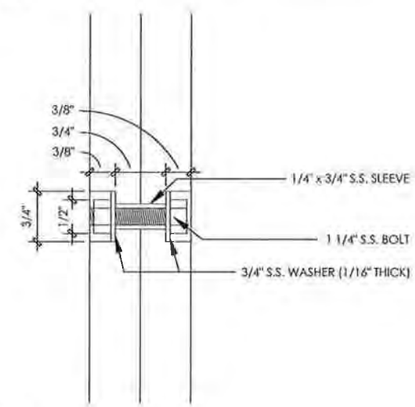

2 A21 DETAIL OF LEG HINGE
SCALE : 1' - 0" = 1' - 0"

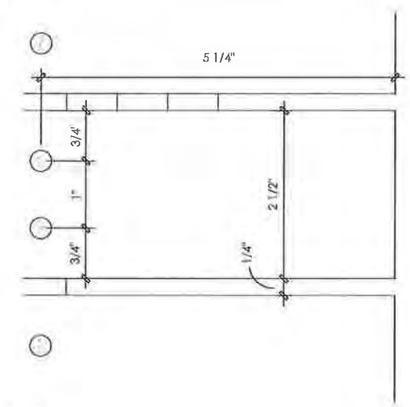

5 A21 DETAIL OF SCREW PLACEMENT
SCALE : 1' - 0" = 1' - 0"

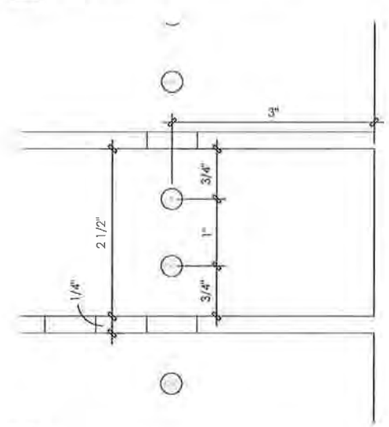

3 A21 DETAIL OF SCREW PLACEMENT
SCALE : 1' - 0" = 1' - 0"

EVERGLADES NATIONAL PARK ECO-TENT
UNIVERSITY OF MIAMI DESIGN BUILD
SCHOOL OF ARCHITECTURE

FURNITURE SET
STOOL

DATE: MARCH 2, 2012
SCALE: SEE SHEET
DRAWN BY: MIKE G.
CHECKED BY: MEAGAN S.
REVISION: 02_29_12

SHEET NUMBER
A21